Rotary "One-To-Many" (OTM) Novel Actuator

A Major Qualifying Project Report:

submitted to the Faculty

of the

WORCESTER POLYTECHNIC INSTITUTE

in partial fulfillment of the requirements for the

Degree of Bachelor of Science

by

_____

Christopher Berthelette

_____

Matthew DiPinto

_____

James Sareault

Date: April 25, 2013

Approved:

_____

Professor Marko Popovic, Primary Advisor

Abstract

There is currently a need for new actuator technologies that emulate muscle dexterity for the purpose of advancing research in soft-robotics, prosthetic devices, and multiple degree-of-freedom robotic systems. The goals of this project were to explore existing technologies and develop a light-weight, cost-effective, energy-efficient, and portable novel actuator to manipulate a soft-robotic exomusculature for use in post-stroke rehabilitation. This project is built off the “One-to-Many” (OTM) concept, a research effort that aims to allow a single artificial actuator to output multiple independently actuated and controlled degrees of freedom. To accomplish this, the team designed a modular device that could be linked together in a network that allows individual modules to share inputted energy from a single electric motor. Each module utilizes a clutch assembly to transfer energy from the system to a rotating elastic element where the energy is stored. Charged modules can then release the stored energy by converting the elastic potential energy to kinetic energy through the use of Bowden cables to produce a linear actuation. The team iterated through several designs to improve upon device efficiency and reduce system cost. Several devices have been manufactured and constructed. Tests have been conducted to show that multiple actuated degrees of freedom can be successfully and efficiently operated off of one initial actuator. Additional tests have shown that the stored power in the elastic element is augmented to produce higher initial output forces and can be controlled and distributed over variable periods of time. The initial prototypes functioned successfully but show opportunities for refinement in the design. In the future, this technology can be easily miniaturized for more advanced applications.

Table of Contents

Abstract i
Table of Contents ii
Table of Figures iv
Introduction 1
Motivation 1
Project Scope 1
Background 3
Biologically Inspired Design 3
Muscle mechanics 3
Actuators 3
One-to-Many 4
Design for Manufacturability 5
Design 6
Goals 6
Task Specifications 6
System Weight 6
System Size 6
Degrees of Freedom 7
Force Actuation 7
Battery Life 7
Design Process 7
System Configurations 8
Initial Design Concepts 8
Selected Configuration 10
Clutch Design 11
Initial Concepts 11
Selected Concepts 15
Energy Storage 16
Initial concepts 16
Selected Concept 16
System Design Description 17

Control 18
Results 19
Prototype 19
Testing 21
Redesign 22
Commercial Feasibility 24
Commercial Application 24
Feasibility Analysis 24
Competitor Benchmarking 24
Cost to Manufacture 25
The Path to Commercialization 26
Future Work 28
Appendix I: Component Part Names and Descriptions 29
Appendix II: Mechanical Drawings 31
Appendix III: Code 48
Bibliography 52

Table of Figures

Figure 1: One-to-Many System Architecture 4
Figure 2: Rough sketch of the linear module configuration 9
Figure 3: Rough sketch of parallel axis configuration 9
Figure 4: Rough sketch of variable motor position configuration 10
Figure 5: Detailed sketch of the selected configuration 11
Figure 6: Examples of Friction Clutches 12
Figure 7: Two methods of implementing a fluid coupling clutch 13
Figure 8: Sketch of a magnetic clutch 14
Figure 9: Sketch and description of a planetary gearing clutch 15
Figure 10: Exploded and collapsed views of the drive shaft and planetary clutch 17
Figure 11: Controller with Finalized Custom Shield 18
Figure 12: Controller with Breadboard Shield 18
Figure 13: Photos of the prototype and pilot modules 20
Figure 14: Plots of Force versus Time for Two Trials 22
Figure 15: Plot of Power versus Time for Three Trials 22

Introduction

Motivation

One of the emerging trends in robotics research today is that of soft robotics. The effort aims to replace the traditionally rigid structures of robotic systems with compliant elements that can allow robots to adapt to their environment [**1**].

Although some soft robots simply attempt to mimic organisms, they can also have more functional applications. Instead of functioning independently, soft robots can be used to interface with humans and assist their daily lives. A soft robot can adapt to the different sizes and shapes of the human body at a given time, while still providing useful benefits such as assisting motion.

Every year, millions of people worldwide suffer from conditions that result in neuro-muscular damage or muscle atrophy and weakness. These conditions frequently leave victims with partial or full immobility of their arms or legs. Stroke is one of the leading causes of long term disability in American adults, and conditions such as ALS or Cerebral Palsy add hundreds of thousands of victims each year. These conditions can add difficulty to or even entirely prevent people from completing even the simplest of daily tasks. As a result, modern research seeks to address these with new technology.

The desire to assist humans with mobility has spurred development of an exomusculature, a soft orthotic brace with multiple Bowden cables integrated throughout the device to allow for force transmission to the user's limbs [**2**]. Using multiple cables within a soft brace allows for angular misalignments to be avoided and maintains user comfort. An exomusculature can be used as part of a lightweight, portable assistive device when it is integrated with proper peripherals to learn user intent and actuate the Bowden cables accordingly.

Project Scope

This project seeks to create a Rotary OTM platform capable of powering an exomusculature. The Rotary OTM system utilizes the One-to-Many (OTM) principle by storing input from a single artificial actuator in elastic elements, each of which corresponds to one degree of freedom. This energy can then be released to produce a controlled linear actuation independent from the rest of the system.

The OTM principle allows for a platform to be developed that can scale to many degrees of freedom without incurring cost, size, or weight restrictions by scaling the number of electric motors. In an OTM system, one actuator, such as an electric motor, converts electric energy to elastic potential energy by deforming an elastic element. This energy is stored within the elastic element until it is ready to be released. To allow for controlled charging and releasing of the elastic element, small clutch systems are used to engage and disengage the desired shafts within the system. These systems use small servos or solenoids so as to avoid requiring an additional heavy motor.

The goal of this project is to transform the research on One-to-Many systems into a physical product that can be used to power an exomusculature. As it stands now, an exomusculature would require either a pneumatic or hydraulic system or a series of electric motors to contract its Bowden cables. With an exomusculature with many degrees of freedom, such a system becomes prohibitively heavy. An

exomusculature would be far more successful with a lightweight novel actuator that can take advantage of the high energy density of a battery. The project team designed, prototyped, and tested such an actuator. Furthermore, the team analyzed the commercial feasibility of any designed device in order to facilitate the first steps of bringing this technology to market and helping people reclaim their lives. Further development of the exomusculature or the sensors for the system was not addressed by this project; rather, this project focused on the actuator that can power an exomusculature system.

Background

Biologically Inspired Design

While engineers and researchers may look at existing products to benchmark solutions and gain inspiration for their own designs, they may also find inspirations in nature. Evolution has tested and refined designs of life for millions of years, so it stands to reason that biological designs fulfill their purpose quite effectively. This makes them very suitable for finding inspiration for mechanical designs. Biological inspired design has resulted in such technological developments as clothing inspired by pinecones that are able to regulate clothing and a robot based on the basilisk lizard that is able to walk on water [**3**].

Although methodology for creating a biologically inspired design is not rigid, there are a few different methods that aim to formally organize such a process. Nature can be used as a source of inspiration for a solution to an existing problem, but it can also be used to spark the search for a problem that can be solved by a particular biological principle. In general, either method depends on a process of drawing parallels between the human and natural worlds, analyzing how a principle is working to solve a problem in the world, and then applying the principle in a new scenario. [**4**]

Biology has inspired numerous technological breakthroughs over the last several centuries and will certainly continue to do so for many more, making it a very suitable area to draw inspiration for mechanical design.

Muscle mechanics

For an engineer who wants to create a novel actuator, there is no better source of inspiration than muscles. Muscles act as biological actuators, which mobilize the otherwise stationary pieces of the skeletal system.

The human muscular system, a subset of the musculoskeletal system, is made up of roughly 640 such muscles, although there is some inconsistency in the literature due to disagreement in what constitutes a unique muscle. Each muscle is made up of muscle fibers, which individually shorten to provide muscle contraction. The strength of a single fiber contracting isn't strong enough to achieve any significant force on a macro level, so the fibers must work together. The process of these individual muscle fibers working together to actuate the desired force at a given point is called recruitment. The number of fibers in a single muscle can be in the thousands or only a few handfuls, depending on the individual muscle. The contraction force that each of these fibers can supply is on the order of tens of microNewtons, although this number will also vary widely depending on the muscle in question [**5**]. Muscles fibers can only contract, meaning that a pair of corresponding, antagonistic muscles is necessary in order to provide a single degree of freedom at a joint.

Actuators

In order to successfully mimic human muscle dexterity, many degrees of freedom need to be actuated. Systems requiring multiple degrees of freedom typically require dedicated motors per degree of freedom, pneumatics, or hydraulics. These systems are a very effective method of distributing power

throughout a system; however, they can often turn out to be inefficient, heavy, and costly. For portable systems, these methods are often inappropriate. Because of this, a more energy-dense system would be more effective.

One-to-Many

The One-to-Many (OTM) concept is the basis of this project. The OTM concept is the idea that a single, motor can be used to convert electrical energy stored in batteries to elastic potential energy, which can be quickly released on command, in several degrees of freedom. [**6**] This system architecture mechanically mimics muscle fibers, which work in groups of hundreds in order to move appendages. Using actuations methods such as hydraulic or pneumatic systems become prohibitively heavy when scaled to many degrees of freedom; electromechanical systems, however, have a much greater energy density, making it more suitable in a biologically inspired design. This system architecture is shown in the figure below.

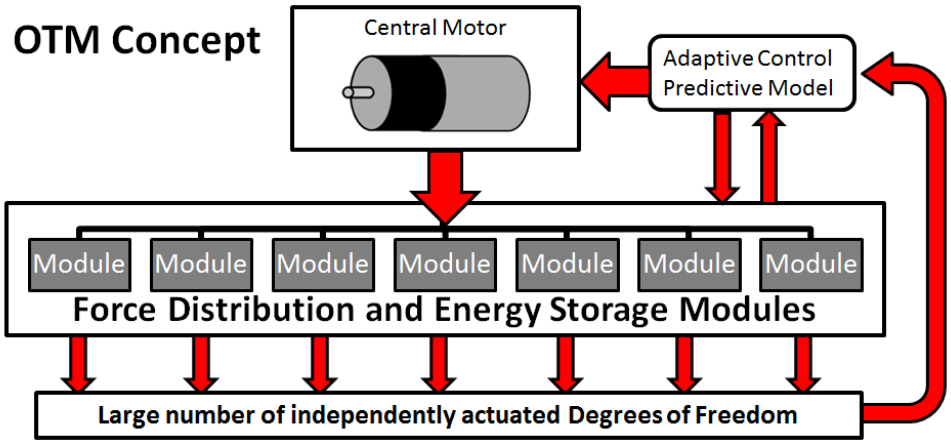

Figure 1: One-to-Many System Architecture

Before the start of this project, research on the OTM concept developed a system with energy stored in linear springs. [**7**] This system was designed as a proof of concept for this OTM platform, and displayed the ability of a single electric motor to charge multiple elastic elements to be released on-demand at a later point. This prototype was capable of actuating up to three degrees of freedom, but was unable to scale past that point without rebuilding the system to fit the desired number of DoF. Each degree of freedom could be actuated, but the output force was difficult to control. Most parts of the system were affixed to a single display platform, which showed the workings of the system on a 2D plane. The success of the linear proof of concept paved the way for the development of a more rigorous device; in addition to creating a device that was more adaptable, stronger, and easier to control, such a device could separate the load and the motor with an elastic element. This compares to the idea of series elastic actuators (SEA), although there are significant differences. An OTM device would be able to independently actuate many degrees of freedom, and can do so without directly connecting the motor to the load. This is primarily because the energy used to actuate each degree of freedom is stored in the elastic element. In SEAs, elastic elements are added in series with the actuator and load to introduce compliance.

Design for Manufacturability

Although there are many design considerations for determining the initial project scope or solution concepts, more guidance may be necessary in determining how to refine a concept into a detailed design. Several methods for focusing on a specific impact of the design exist. Design for manufacturability (DFM), aims to reduce the cost and time to manufacture a finished product without compromising on product quality.

DFM is both a consideration on the entire design process and a checklist for a final design. From the ideation phase, engineers should be aware of how their designs will be constructed and assembled in a mass-production environment. An idea that cannot be realized does no good if the end goal is a ready-for-market product. As an idea approaches a detailed design, it is important for a team to take a more methodical approach to DFM.

The first step in a DFM checklist is to determine the initial state of the project. This is accomplished by analyzing the design and understanding costs for manufacturing. Costs that need to be included are costs for the raw materials/parts, costs for assembly, and also overhead costs. Standard parts are the easiest price to estimate; these can usually be obtained by getting a quote directly from a supplier or estimating based on past experience using similar parts. Custom parts have an added cost for new tooling that will be required to manufacture the part, so they can be much more expensive when the parts are being produced in small quantities. Depending on the application, however, custom parts can be designed so that they are much easier to assemble, allowing them to make up their additional part cost by saving on assembly cost. Determining a cost for custom parts is always a rough estimation, but it should attempt to take into account the cost for raw materials, processing, and tooling. Cost of raw material must take into account the anticipated size of the part as well as scrap that will be generated during processing. Because of economies of scale, it usually makes more sense for parts produced in small quantities to be assembled using standard parts in order to keep costs down. When comparing parts of equal quality, custom parts should only be used when their benefits in terms of ease of assembly offset their additional costs [**8**].

The next step to consider is the actual assembly of the system. One way to improve ease of assembly in a design is to incorporate multiple parts into a single piece. A single part adds a theoretical minimum time of three seconds of assembly time, and it is usually longer than that [**9**]. When considering the number of times that a new assembly will be put together, it is easy to see how extra parts can make an assembly process much less efficient.

Design

Goals

One of the largest tasks in this project was the design of an actuator that applied the OTM principle in a rotary fashion. The desired actuator would need to be lightweight, portable and modular, allowing for it to be integrated with the exomusculature in an assistive device or function independently in an entirely different application. Modularity was desired to allow the device to deliver the precise number of degrees of freedom without requiring unnecessary weight.

To further define the goals of the project, a set of task specifications were determined. These were based upon the anticipated minimum viable product, or a version of the design that is developed enough to be sold on market without wasting resources by iterating through several rounds of designs that won't necessarily lead to additional sales. This process shortens time to market and reduces the financial risk taken by entrepreneurs and their backers.

Task Specifications

1. A system that is able to actuate 4 degrees of freedom must weigh less than 10 lbs (44.5 N, or 4.54 kg)
2. The system must fit inside an envelope of 13.12" x 15.89" x 8.21" (33.33 cm x 40.361 cm x 20.85 cm)
3. Each device must be able to contract a minimum distance of 6" (15.24 cm) and with a force of 22.5 lbf (100 Newtons)
4. The system should be able to run continuously for 1-2 hours without recharging.

Each task specification was determined based on ergonomics or usability of the end product. Descriptions of the factors that influenced the task specifications are below

System Weight

If the anticipated application for the device is with an exomusculature, it is reasonable to contain the device in a backpack. Therefore, to determine the maximum allowable weight, published guidelines for backpack weight were consulted [**10**]. This was based on the weight of the lowest percentile of the American population. Although designing for 99% of the population could be seen as over-constraining the project, as a higher weight could allow for more assistive power from the device without affecting many of the end-users, it should be noted that the guidelines were for the maximum weight in a child's backpack and that this may be uncomfortable for those who are trying to use the device to help them recover from an injury.

The system weight is inclusive of all modules required to create actuation in the desired degrees of freedom, the control system and the battery.

System Size

In order for the system to fit comfortably in a backpack-like device, it must be designed to fit the body of the smallest of the population. The length and width dimensions are based on "waist back length" and

"interscye" measurements, respectively, of the smallest 5% of the American adult population according to a U.S. Army report [**11**]. The allowable device depth was based on the 5% percentile measurement of chest depth. The reasoning behind using measurements of the 5th percentile is that a small system designed to fit the smallest of the population could be adapted for the largest of the population without any trouble. The constraints on depth were to ensure that the user does not lose balance when standing upright due to the moment created by wearing the device, and to anticipate the

This depth is adequately small to prevent significant moments on the user due to the backpack weight, which could cause the user to lose balance.

Degrees of Freedom

The number of degrees of freedom that are necessary to make the One-to-Many system useful is inherently tied to its specific application. To set a constraint for the design of a device, it was necessary to anticipate what the minimum viable product was. For an exo-musculature to be useful, the team hypothesized that it was important for it to not only help the user lift a given load, but to lift the load to any coordinate position within reason. As the length of the forearm and upper arm cannot be changed, achieving any position is only available through mobilizing multiple joints. For this reason, the team sought to design a device that could be used to mobilize the three degrees of freedom in the ball joint of the shoulder as well as the one additional degree of freedom located in the hinge joint of the elbow without exceeding the maximum allowable system weight.

Force Actuation

Although the team looks forward to the day when the device will be able to help a stroke victim artificially regain full muscle strength, the minimum viable product simply helps such a patient to regain the use of arms for basic daily tasks. The envisioned product should be able to help people perform light lifting. The benchmark that was decided upon was being able to lift a gallon of milk to shoulder height.

Battery Life

For the One-to-Many system to be useful, it must be able to actuate more energy per unit weight with the electric motor than with a hydraulic or pneumatic system. Additionally, the batteries must be able to power the system for long enough for the device to be useful while still keeping the weight under the maximum limit. The minimum allowable time was estimated to be approximately 1 hour. This is the anticipated amount of time that the end user would use the device for any one activity before taking time to recharge or replace the batteries. As the technology improves, this battery life will grow and allow for extended periods of device usage without adding prohibitive weight.

Design Process

The first step in designing this system was to pick a high-level configuration for the overall system. A configuration is important because it dictates a strategy for the rest of the design process. Once a configuration is determined, individual elements can be designed and optimized. Without a good configuration, the design process does not have focus and may create unnecessarily complicated systems.

Determining a system configuration followed three steps: ideation, evaluation, and refinement. After the problem to be solved is identified and task specifications fully define the project's scope, methods of addressing the problem were conceived and sketched. Key to a successful ideation phase is the generation of a multitude of ideas; brainstorming ideas without regard to the likelihood of their implementation is important new and better ideas can be built off of lesser ones. Divergent thinking encourages creative solutions to the problem and spawns innovation.

After many ideas are generated, they need to be evaluated. To evaluate ideas, a structured method such as the use of design matrices can ensure that each idea is given the consideration that it deserves. To use a design matrix, a list of ranking criteria that are important to the design are determined and then given a weighting factor. Then all of the ideas are evaluated and scored based on the ranking criteria. These scores are multiplied by their weighting factor and then summed for each design. Assuming the weighting factors accurately portray what is most important in the desired design, the best ideas will be those that have the highest scores. All designs should be reexamined to see if there are negative features that could possibly be eliminated or positive features that could be incorporated in a higher scoring design. A design that encompasses aspects of many of the original ideas very well may be better than any single idea. This process gradually eliminates the worst ideas and allows the best ideas to improve.

As designs are narrowed down, they are prototyped and tested. The transformation of a theoretical solution into a physical solution can bring once-hidden problems to the forefront and allow the ideas to be improved or abandoned. The process of testing and improving a prototype allows a product to improve over several iterations and allows for designs to approach an optimal design. Due to the many different factors that impact any given design, however, a design that perfectly addresses everything may be impossible to obtain.

System Configurations

Initial Design Concepts

Series module configuration

The idea behind this configuration is to have one module interface directly with the motor to provide the energy input for one degree of freedom. This module would also let the energy transfer directly through itself and would have a complementary interface on the side opposite the motor so that additional modules could be attached. Each module would be able to accept the connection from the motor or another module and then continue the connection to another module on its other side.

This configuration is relatively simplistic and does not require motion within the system outside of the rotation along the motor's axis. Constant rotation of the motor shaft to charge any uncharged modules at once, however, requires a stronger (and therefore also probably heavier) motor than would be required to charge the modules individually.

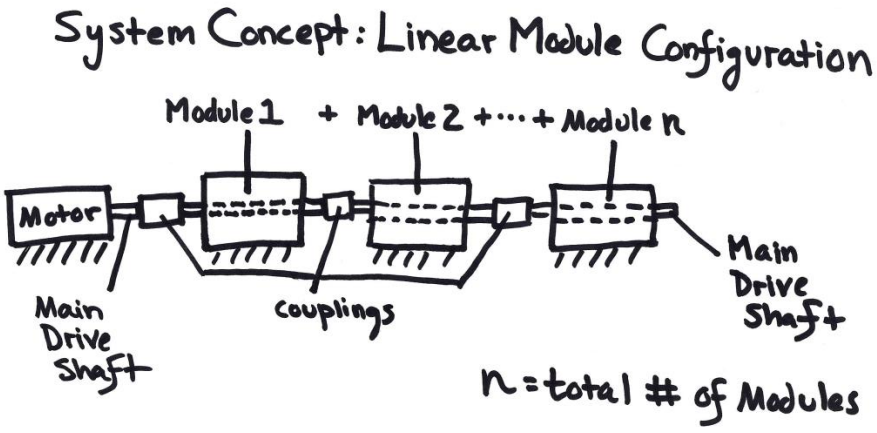

Figure 2: Rough sketch of the linear module configuration

Parallel module configuration

This configuration is similar to the linear module configuration in that energy is constantly supplied to each module that is attached to the system; however instead of the individual modules being aligned along the same axis as the electric motor, they are on a parallel axis. The motor would constantly power the first axis, and then energy would be transmitted to the alternate axis by means of a clutch.

The configuration with multiple axes provides an advantage by allowing the system to grow beyond a single line of modules. Depending on the application, a single line of modules could allow for insufficient degrees of freedom to be actuated before the system simply becomes too large. The parallel configuration allows the system to scale in multiple directions and could be very advantageous when using in a system that requires many degrees of freedom.

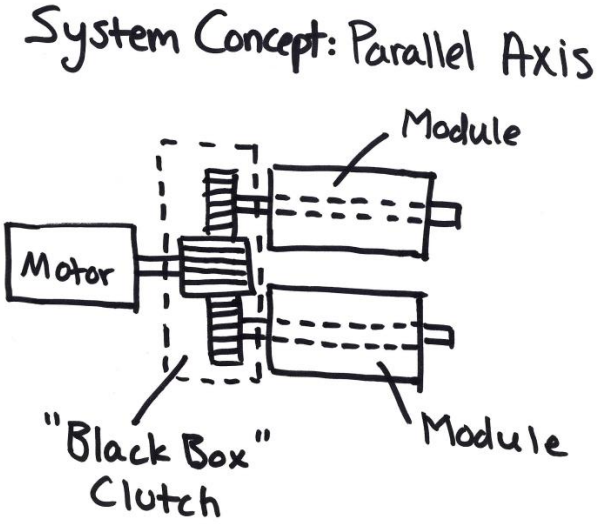

Figure 3: Rough sketch of parallel axis configuration

Variable motor position configuration

This configuration is different from the first two configurations in that a single module is charged at any given time. The motor would move to the position of the module that needs to be charged and would engage with the module's first clutch until it is fully charged and ready to actuate, and then it would move onto the next module that needed to be charged. This is similar to how a computer printer moves the ink cartridges to the appropriate position above paper before it releases ink onto the sheet.

This configuration results in less stress on the motor because it is only charging one module at a time and it is not engaged to the entire system. However, this means that charging the entire system would take longer and longer as the system scales to many degrees of freedom. This is a drawback especially when considering that it is likely that many modules would be activated simultaneously when there are many modules connected to the system. There is also additional weight necessary to mobilize the electric motor into position.

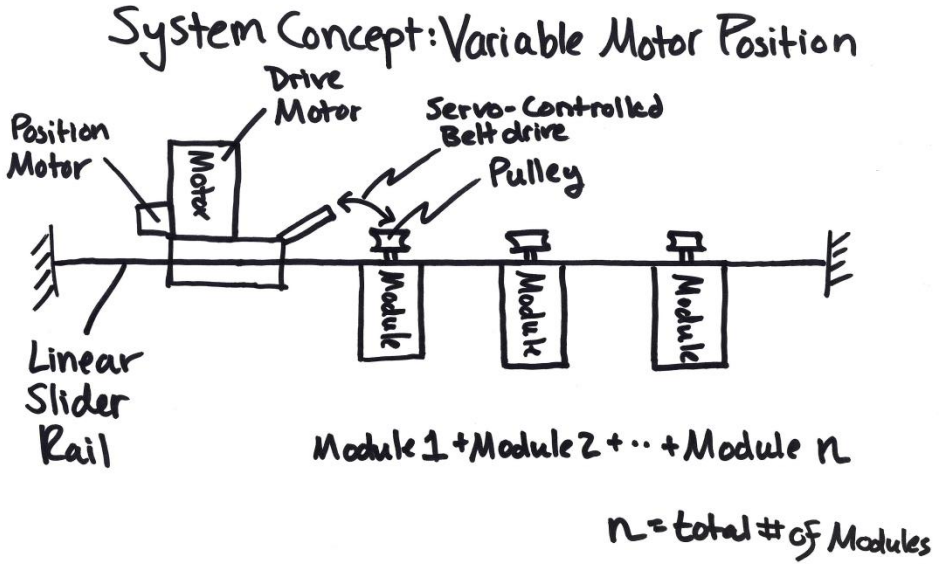

Figure 4: Rough sketch of variable motor position configuration

Selected Configuration

The final configuration of the system was similar to the series configuration described above. The system was selected because of its mechanical simplicity and its ability to charge one or many modules simultaneously, depending on the state of the clutches within the individual module. The system architecture can be seen in Figure 5 below.

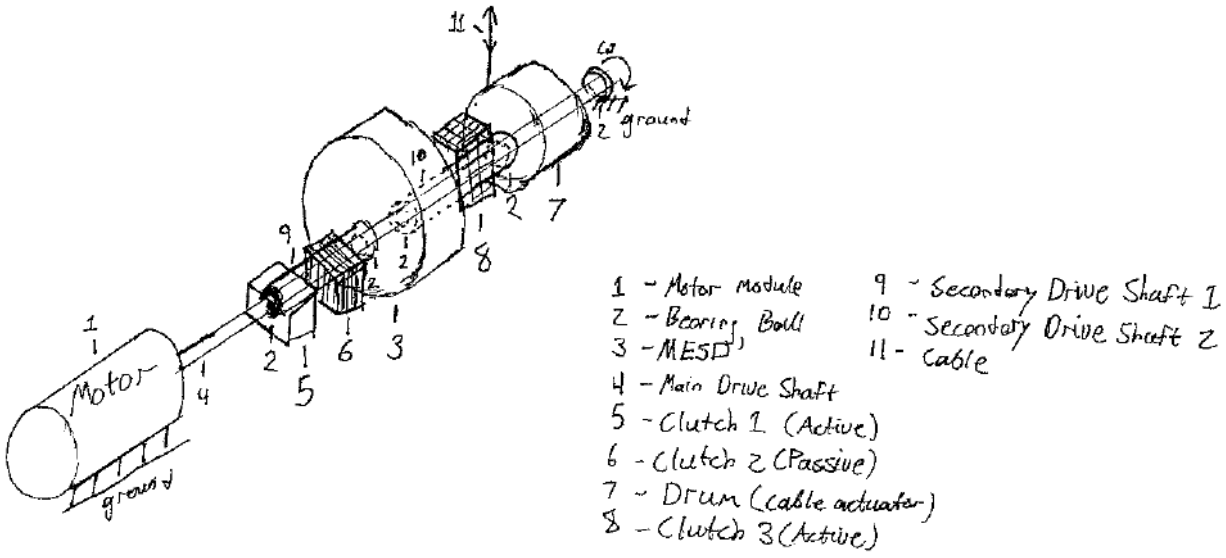

Figure 5: Detailed sketch of the selected configuration

The three clutches within this system work together to allow the system to charge, store and release energy when desired. The first clutch engages the main drive shaft and the secondary drive shaft when the system is charging. The rotation of the secondary drive shaft pulls on the elastic element, which stores the energy as elastic potential energy. A passive clutch prevents the energy from releasing while a third clutch engages, which also maintains the energy storage. Now that the third clutch is engaged and locks the energy storage, the passive clutch can disengage. The third clutch can store the energy as long as necessary and then release it when desired. The disengagement of the third clutch allows the energy output to be controlled. This process of charging, storing and releasing energy is summarized in the table below.

Table 1: State of Clutches

Clutch 1 State	Clutch 2 State	Clutch 3 State	System status
Engaged	Passive	Engaged	Charging
Disengaged	Passive	Engaged	Storing Energy
Disengaged	Passive	Disengaged	Releasing Energy
Disengaged	Active	Disengaged	Resetting System

Clutch Design

One of the biggest challenges with the selected configuration was designing the clutches and brakes to allow for the rotating elements to connect and disconnect as desired.

Initial Concepts

Friction

Friction clutches are the most common type of energy transfer in a clutch system. These systems rely on contact between two surfaces that will rotate together creating a friction force between them that

causes the shafts to start or stop rotation, depending on the application. Friction clutches can dissipate large amounts of energy and allow for possible slip between the contact surfaces if the normal force is not great enough to maintain static friction. Some common types of friction clutches include disc clutches and drum clutches.

Friction clutches could be implemented in the system in several different forms. A disc clutch or a drum clutch could be used to engage the two rotating shafts together. A moving pulley could act as a tensioner for two parallel shafts that are connected by a belt. A roller could move in and out to create contact between two coaxial shafts. Sketches of possible designs are seen below in Figure 6.

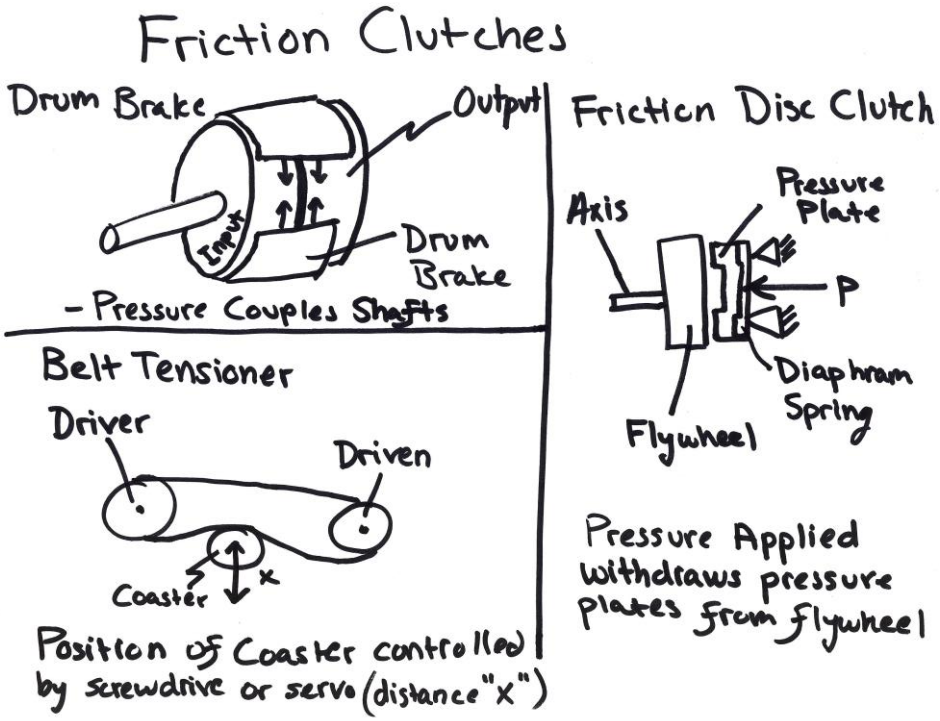

Figure 6: Examples of Friction Clutches

Fluid Coupling

Fluid coupling clutches operate on a similar principle as friction clutches, except there is no direct contact between the rotating surfaces; instead, fluid coupling clutches depend on friction between a fluid that separates two surfaces and the surfaces themselves. The rotation of one shaft produces movement of a fluid, which in turn makes the other shaft rotate. Typically, the fluid will be incompressible and will be enclosed and the surfaces will have an optimized fan shape. This allows for a more efficient system than could be achieved otherwise.

Because the two elements are separated by a fluid medium and do not have direct contact with each other, there is a delay between when the first element begins rotating and the second element begins rotating. This allows for smooth transitions when the clutch is engaged or disengaged. It also decreases

the overall efficiency of the clutch system, and energy is constantly lost due to friction between the fluid and the containing volume, which dissipates out of the system as heat.

Two ways of implementing a fluid coupling clutch were considered. The first method involves pumping fluid into the enclosure with the fan shape to allow for the clutch to engage, and draining the enclosure when it is time to disengage. This allows the fluid flow to only move the fan when engagement is desired. Other methods could involve using a fluid that can change viscosities on demand. An electrorheological fluid with a very low viscosity might not be able to spin the fan and connect the shafts at all, but when it is excited its viscosity increases by several orders of magnitude, allowing shafts to couple and energy to be transferred. Ideas can be seen in Figure 7.

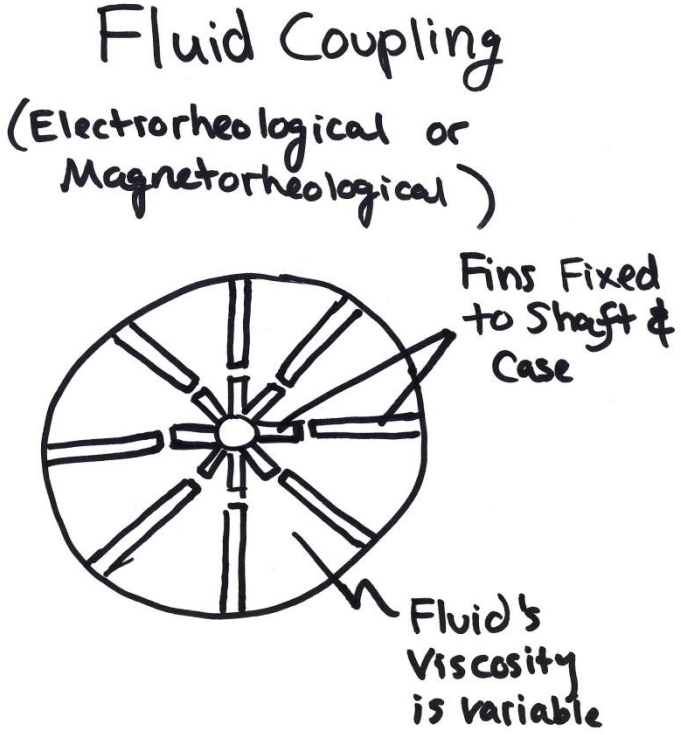

Figure 7: Two methods of implementing a fluid coupling clutch

Positive Contact

Instead of relying on a force to create friction, a positive contact clutch relies on a force creating a physical interference between the geometry of two shafts. This is usually achieved by moving one shaft into position so that its teeth push the corresponding teeth on the opposite shaft. Positive contact clutches can provide rotation without slip between the clutch elements, but they have to be engaged at low speeds.

The implementation of a positive contact would be similar to that of a friction clutch. Each of the friction clutch mechanisms described above could be executed as a positive contact clutch by using gears instead of friction plates.

Magnetic

Magnetic clutches use principles of electromagnetism to engage and disengage the clutch elements. They can be used to power a standard friction clutch, or they can exert magnetic forces on the shafts without any physical contact being necessary. These clutches typically have smooth engagements and disengagements, and are very common due to their easy control mechanisms.

To use a magnetic clutch in the system, one shaft would have permanent magnets and the other shaft would have electromagnets at a corresponding location. The electromagnets would polarize when engagement is required and depolarize when it is not. This is illustrated in Figure 8.

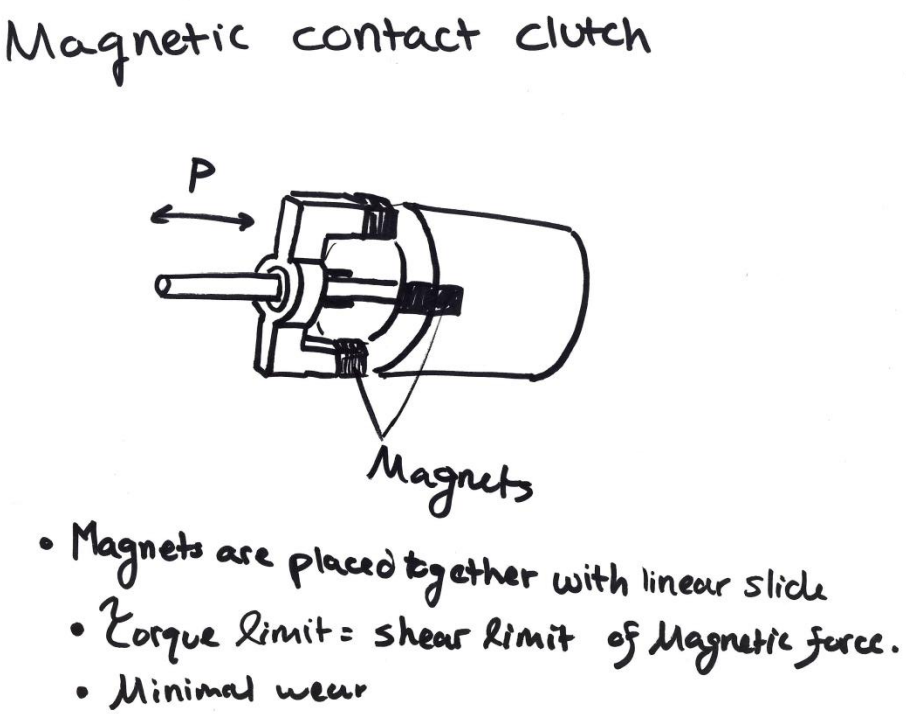

Figure 8: Sketch of a magnetic clutch

Overrunning

Overrunning clutches are clutch mechanisms that allow rotation in only one direction by creating interference between parts of the clutch when one element tries to rotate in the wrong direction. When a force tries to rotate a clutch element opposite the clutch's direction of flow, a mechanical interference prevents the rotation. This type of clutch is commonly seen on devices such as a ratchet pawl.

An overrunning clutch would be very useful in the selected configuration. Such a clutch would be able to prevent back-driving of the charged elastic element until it is time to release the stored energy.

Planetary Gearing

A planetary gear set with a fixed location for the sun gear (such as on a rotating shaft) is a two degree of freedom system. Spinning a given gear won't provide a corresponding output for the rest of the system unless there is another element whose position is defined. By locking the position of one of the bodies, one degree of freedom is removed from the system and the rotation of one body will lead to the rotation of another. This concept allows the system to be used as a clutch.

By attaching one of the rotating shafts to the sun gear and attaching the other shaft to the carrier of the planet gears, the rotation of the shafts become coupled together. When the outer ring becomes locked to the ground, the two shafts can now rotate together. The process of actually grounding the outer ring can be accomplished by nearly any type of brake.

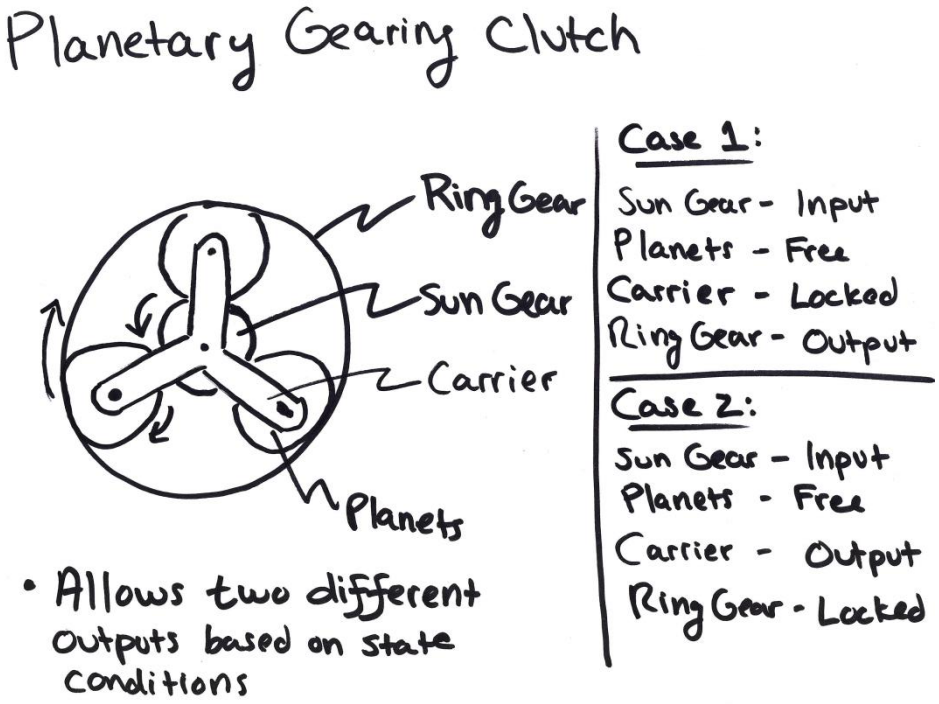

Figure 9: Sketch and description of a planetary gearing clutch

Selected Concepts

Multiple ideas ultimately were put into the design. The input shaft was connected to the secondary drive shaft using a planetary gear set, with a band brake locking and releasing the outer ring. The secondary driveshaft was prevented from back-driving and releasing its energy by an overrunning clutch while it was charging. When it is charged, another band brake locks the system down. The band brake can then disengage when it is time to release the stored energy.

Energy Storage

Another element of the selected configuration that needed to be refined was the energy storage device. The energy storage device would take the kinetic energy from the motor and store it locally within the individual module. This energy could then be released on demand, allowing for multiple degrees of freedom to actuate simultaneously. The energy could be stored in any form, although the compliance provided by storing it in elastic potential energy was a benefit, so it many ideas focused on that method.

Initial concepts

Linear Spring

The starting point of the One-to-Many concept used a linear spring. A linear spring is a simple way to store energy in the form of elastic potential energy. The force output by linear springs is typically proportional to the displacement of the ends, although they can be designed to have different properties if desired.

Torsion Spring

Instead of storing energy in a radial displacement, torsion springs displace radially. This means that less space is needed to contain the charged spring. Torsion springs typically have a helical coil shape.

Power Spring

Similar to a torsion spring, a power spring is an elastic that holds energy when it is subject to a rotational displacement. It is a thin strip of spring steel that is wound into an arbor and contained in a housing.

Torsion Bar

Another way to store energy is in a radial manner is through the use of a torsion bar. Like a torsion spring, energy is imparted into the system when a rotation causes a body to deform. Typically a metal bar, the torsion bars generally require less rotation to achieve a given force than torsion springs. Torsion bars can be significantly heavier than springs, which makes them particularly valuable in high-stress environments. They can be designed to have nonlinear force characteristics.

Elastic Tubing

Elastic tubing could be used as a method of storing energy. Its flexibility makes it an accommodating to various designs, as it can be deformed multiple ways. It can be twisted, stretched along its axis, or wound around another body. It is inexpensive, but it typically won't hold as much energy as metallic springs.

Flywheel

Instead of storing energy in elastic potential energy, it is also possible to store it as kinetic energy. The rotation of the input driveshaft could power the rotation of the flywheel, which would engage with the cable spool to release the energy when desired. This would require very good bearings to attempt to minimize losses of energy to friction, which would happen whenever the flywheel is spinning. In order to store lots of energy in a flywheel, it is necessary to have lots of mass. Also the inertia of the spinning flywheel can impart undesirable forces on the system.

Selected Concept

The final design utilized a spiral power spring. This method provided significant benefits without many drawbacks. It didn't have the weight of the torsion bars, it was more compact than a linear spring, and could hold more energy than elastic tubing.

System Design Description

The following is a description of the overall design. Please refer to Appendix I: Component Part Names and Descriptions *for detailed descriptions of the individual parts mentioned here, and to Appendix II*: Mechanical Drawings *for drawings.*

The module operates by storing energy provided from the motor through the Main Drive Shaft (MDS), and storing it in a power spring contained in the Energy Storage Device (ESD). First, the system starts in a neutral state where clutch 2 in engaged, prepared to store energy, the MDS is rotating, and clutch 1 is disengaged allowing the ring gear freedom to rotate. When the module reaches a charge cycle clutch 1 is engaged. With the ring gear fixed, the only degree of freedom left in the planetary gear set of clutch 1 is the planets, and accordingly the carrier. As the carrier rotates, it powers the Secondary Drive Shaft (SDS) which is directly interfaced with the power spring of the EDS. After the system has been charged to the potential of the power spring clutch 1 is disengaged and the ratchet pawl serves to store this energy such that the system as a whole can charge other modules. When an output is required, whether sudden or gradual, clutch 2 will be released by the actuation of a servo. As the servo is released, the amount of resistive torque generated by the band brakes falls to a point that the cable drum begins to rotate. As this drum rotates, Bowden cable is drawn into the system. In order to reset the Bowden cable to its zero-state the system is run through a three step process. Clutch 1 is reengaged to take pressure off the ratchet pawl, the solenoid controlling the ratchet pawl is engaged to retract the pawl, and clutch 1 is disengaged. This allows excess energy to be released through the ring gear. At this point the Bowden cable is free to be drawn out, clutch 2 is reengaged, and the system is prepared for a charge cycle.

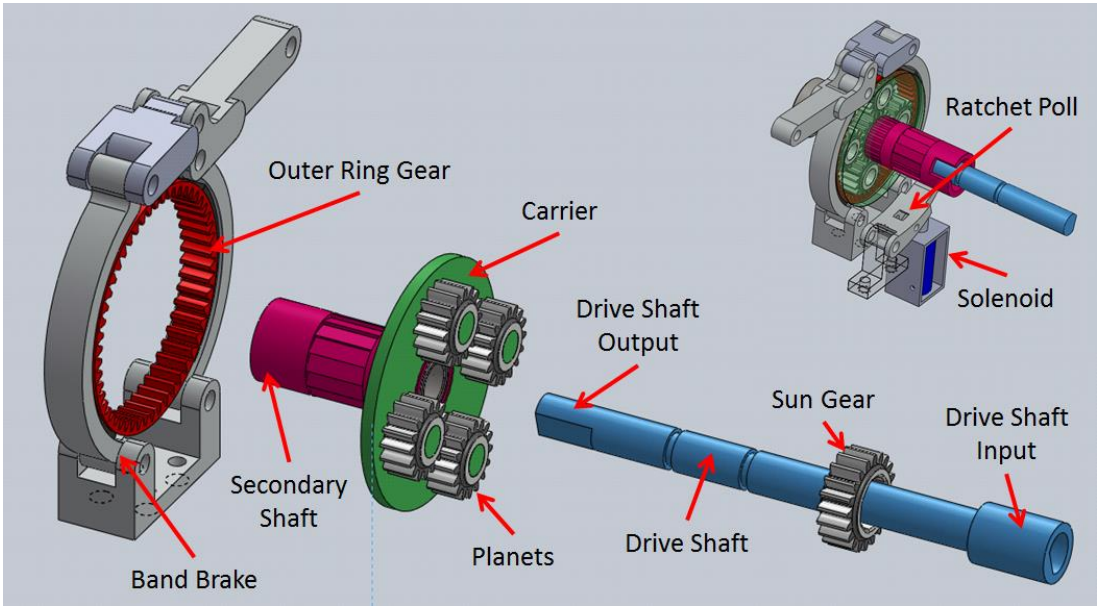

Figure 10: Exploded and collapsed views of the drive shaft and planetary clutch

Control

For testing and demonstration purposes, the system is controlled by a single-microcontroller designed around the Atmel AVR chip. The microcontroller is equipped with a customized shield which provides a good interface for connecting servo motors and non-latching solenoids.

A circuit was designed to take the low level signals from the microcontroller and trigger the higher-current signals required to actuate the solenoids. For testing purposes, switches were added to control when the module needed to release the energy. The higher-level sequence allowed for the modules to automatically charge after they had released the energy and received the signal to reset. The control architecture was designed to allow for the addition of both more modules as well as higher-level control for use with sensors.

Additionally, the main motor only needs to run when a module is triggered to charge. This in turn can prove more efficient than running the motor at a constant velocity.

The use of a servo to control position of the band-brake proved very useful. Because the mechanical design incorporated an elastic element between the brake lever and the arm on the solenoid, the resistance allows for better control of the release.

Currently, an estimated linear relationship between the position of the servo and the release speed has been worked into the program. This allows for the control position of the servo in series with the elastic element to control the friction of the band-brake on the spool. Controlling this friction is key to better control of the OTM release onto the attached load.

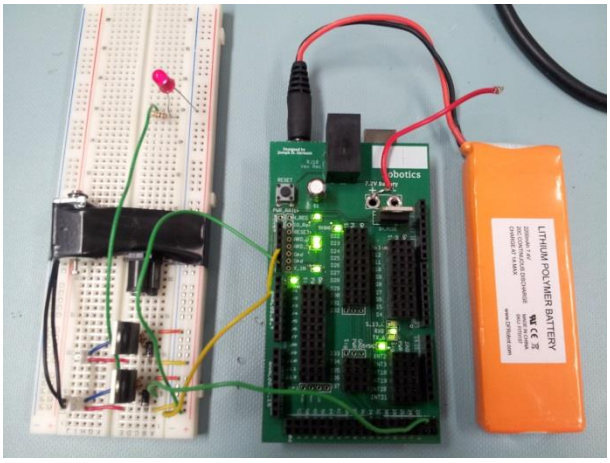

Figure 12: Controller with Breadboard Shield

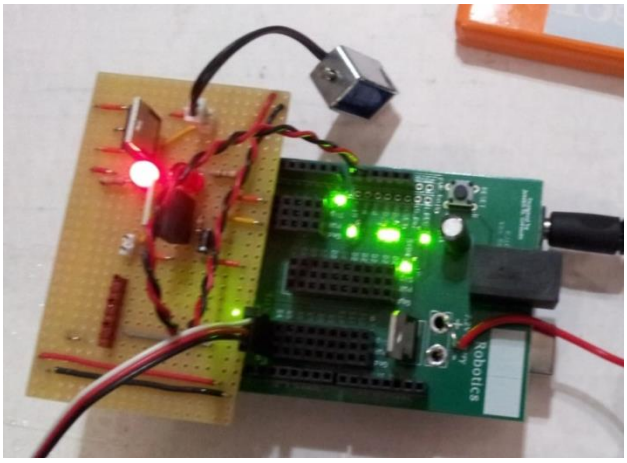

Figure 11: Controller with Finalized Custom Shield

Results

Prototype

Upon achieving a suitable system design, the next step was to construct a prototype and then test it. The team first constructed a rough proof of concept model of the configuration described above out of various types of plastic. The purpose of this model is to ensure the mechanism would function as desired without investing significant time and money into producing a device that doesn't work. To construct the model, a sheet of acrylic was cut to the required shapes. Parts that needed precise shapes, such as the planetary gear set, were formed using a laser cutter. Parts that required less precision were simply machined to shape. The elastic element was simulated using a series of rubber bands that were fixed to the system ground and attached to a spool, which would wind up to tension the elastic.

Although this model was very large and most pieces would break under any significant load, it was useful in proving that the system concept worked. The input driveshaft could be spun by hand, which would spin the sun gear without transmitting energy to the secondary drive shaft until the clutch was engaged. A lever can be flipped to close a band brake and lock the outer ring of the planetary drive shaft to the ground, allowing the carrier to spin the secondary drive shaft and the spool for the elastic. After the elastic is tensioned, the second band brake lever can be flipped to allow the stored energy to release. The acrylic version of the prototype did not include a representation of the ratchet pawl mechanism, as the benefit of realizing what was a well understood and simple device was outweighed by the difficulty of producing the teeth on a plastic shaft.

As the initial acrylic model was only meant to illustrate that the system concept functioned as designed, it was not subject to any rigorous testing; simply spinning the drive shaft by hand and flipping the band brakes when required was enough to show the relative motion of the components and prove the system concept. The details of the system would be refined and improved upon in subsequent iterations. The next prototype would use the system to actuate significant loads and interface with the control system, essentially being a working prototype of the desired end-product. Before such a prototype could be constructed, however, it was to be created digitally. A 3D CAD model was built in Solidworks, allowing the team to develop a digital representation of the next prototype before cutting metal. The team used files of off-the-shelf parts whenever possible and built the rest of the assembly around these existing parts, translating the system concept into a stronger design. Due to the success of the initial proof-of-concept model, the mechanism concept did not have to change very much in the process of creating a full prototype; rather creation of this second version was an exercise in working out the details of the overall device. One notable difference in the functionality of the two versions is the use of a power spring (spring steel) to store energy rather than the linear elastic (rubber band), which allowed for much greater efficiency in the system. The ratchet pawl mechanism was also implemented for the first time in the full prototype.

The first module was created based on the initial CAD model, and had various pieces that would attach onto a rigid frame. The frame would enclose all of the moving elements to protect the user from potential injury as well as to provide for a local ground. The two rotating shafts were supported by bushings that were seated on the frame as well as on additional supports on the frame's caps. To make

the device simple to manufacture, the frame was made out of a piece of extruded aluminum, which attachment points for separate features machined into it, as described in Figure 13. This allowed for a relatively complex geometry on the frame without requiring excessive material and machining.

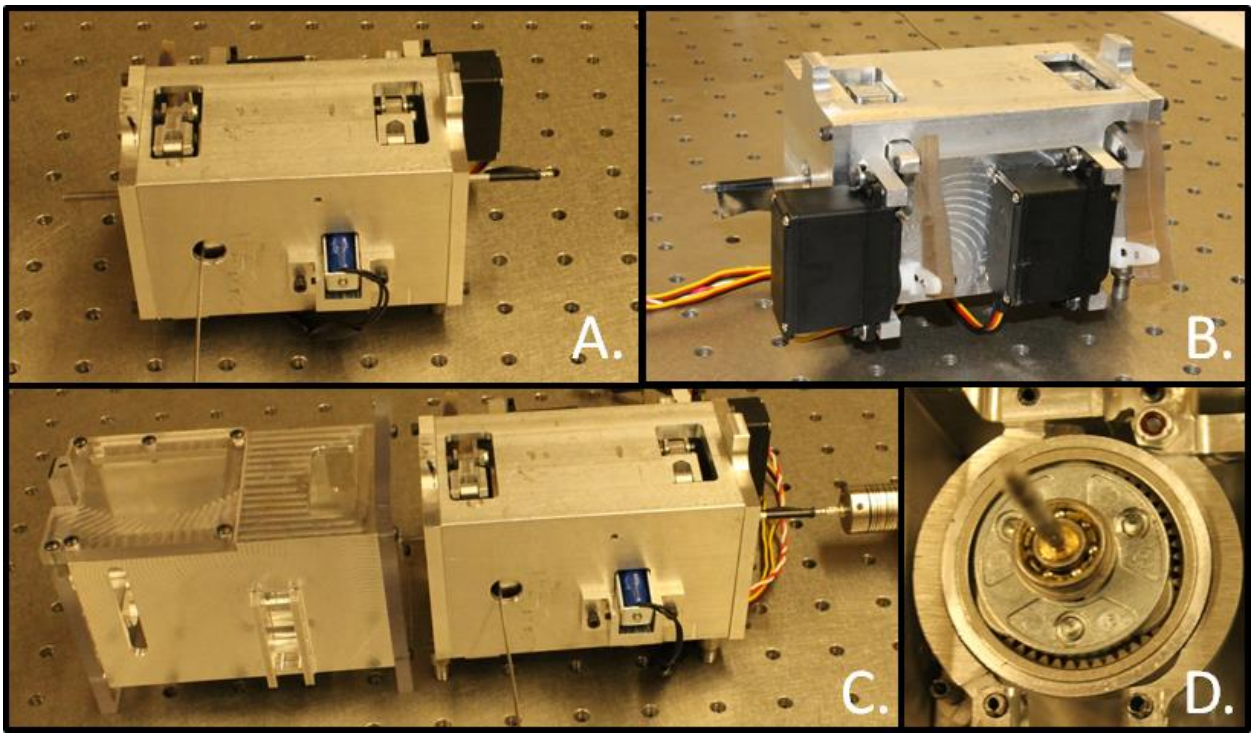

Figure 13: Photos of the prototype and pilot modules

After the prototype module was constructed and tested, the design was updated and a pilot module was built. This was intended to be a prototype of the device that could be brought to market, and addressed the unforeseen issues that were discovered when the prototype module was constructed.

Changes that were made in the design following the testing of the pilot model significantly improved the performance and consistency of the design. These changes include modifications of the band brakes, cable drum, secondary drive shaft, and case. First, the band brakes initially used a large link joining the ends of the band brakes. This link was replaced with a small steel link that could be contained within the end of each brake, accordingly reducing size, weight, and manufacturing costs. Second, the cable drum originally had the Bowden cable exiting perpendicular to the surface that it wraps around. This design caused an extremely inconsistent force curve for the module, and was changed to place the cable tangent to the spool when it begins to wrap, as such producing a much more linear force curve. Third, the secondary drive shaft was originally rotating on bushings and supported on the main drive shaft. This presented the issue of friction with the main drive shaft, which was minor without energy stored in the system. However, when the ratchet pawl was used to prevent back-drive of the secondary drive shaft and accordingly maintain energy in the system, this friction was significantly increased due to a high tangential force. The solution implemented to prevent this excess friction was both supporting the secondary drive shaft on bearings about the main drive shaft and controlling the position of the

secondary drive shaft by using a large bearing fixed to the case. With the addition of these bearings, the friction between the shafts was significantly reduced and deflection of the main drive shaft was minimized. Lastly, the case used in the pilot was comprised of seven pieces, each being secured with 4-40 screws. The number of individual components caused a number of opportunities for poor tolerances that led to deflection of the main drive shaft and accordingly increased friction. The updated model utilized CNC machining in order to produce a case that replaced all 7 pieces with one part. This case reduces the overall weight, cost, and difficulty to assemble the system while also significantly increasing the accuracy and repeatability. These changes reduced the weight and cost of the model while increasing accuracy and repeatability.

Testing

A series of tests were conducted on the modules to determine if the design achieved the task specifications. These tests would determine the suitability of a system of modules in the anticipated market application, and also evaluate the achievements that were attained by the design. Tests were planned to measure the force and power output of a single module, the time to charge a single module, the time to charge two modules in series, and the duration of continuous use from a single battery charge. Together with measurements of size and weight, the team could assess the status of the prototype with respect to the each of the initial task specifications.

To test the force output, the system with one module was grounded and then connected to a mass, which was held by the Bowden cable as it hung over the side of the table. The Bowden cable was placed upon a Vernier Rotary Motion Sensor, which was able to measure the position, velocity and acceleration of the mass. The system was charged and then allowed to actuate and lift the hanging mass. The data from this test could be used to infer information about the force acting on the mass at any given time as well as levels of energy that were stored in the system when it was triggered.

The first time the position of the position of the mass was measured, the secondary band brake was released completely, which allowed the elastic element to release all of its stored energy at once. This resulted in a sharp spike in the output force, showing the device's capability for a large maximum force when required. As seen in the left side of Figure 14, the force output reached 60N before flatlining, indicating that the available instrumentation could not accurately measure the force. As this full force of the spring is not always needed or even desired, it is important to control the release of the cable actuation. A test was run with the second band brake being released slowly, which gradually decreases the friction between the brake and the drum and allows the output to be released slowly. The right side of Figure 14 depicts the results of the test which demonstrated this controlled output. The cable begins to pull at under 10N, but it rises to above 40N by the end. The force of the spring quickly overcomes the static friction, and begins to release the rest of its energy at a constant force, as can be seen by the periods of small variations in applied force in the graph. These can be attributed to the servos that control the band brakes reaching a given position before moving to the next, less engaged step. In an application that requires a precise force release, the position of the servo can be used to control the output.

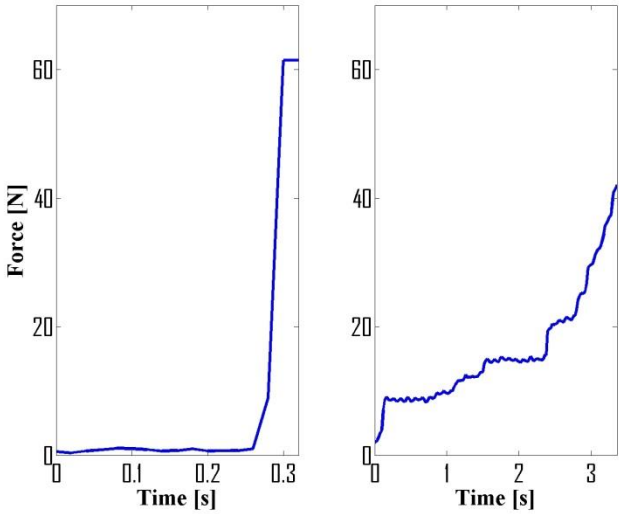

Figure 14: Plots of Force versus Time for Two Trials

In addition to the force output by individual modules, it was necessary to examine the power release in the previous tests. The same data was able to give insight about how the system stored and released energy. Each test began with a charging cycle, which puts a low level of power into the elastic element at a slow, constant rate. The energy from this charging cycle gets released at a different rate when the elastic element is triggered, and power is augmented. This is demonstrated below in 15. As shown in here, a constant amount of energy is released over variable lengths of time, which correspond to a variable level of power augmentation.

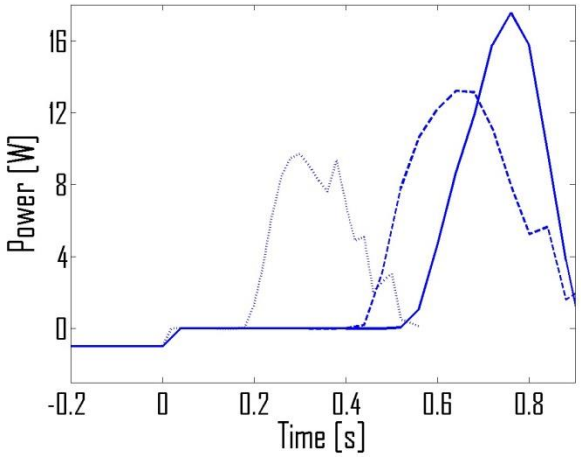

Figure 15: Plot of Power versus Time for Three Trials

Redesign

The testing of the second module saw improvements in the efficiency at a cost of significant increases in manufacturing cost. The shear length of time that it took to machine the module makes the cost to professionally produce just one device unfeasible. As a result, it was necessary to redesign the module.

The third iteration of the design would not be physically prototyped. Instead, the device would be designed digitally to allow for an easier time in a future manufacturing setting. The design would take into account a prototype being machined to test device efficiency and for it to be later taken into small to medium volume production as an end product. This means that parts would be die cast or injection molded instead of being machined.

The most significant change to the system design is the decision to use a disc brake instead of a band brake. Although the band brake is very efficient at stopping the rotation, it causes a lot of stress on the frame. This is not a problem on the prototypes because they have thick outer walls, but on a lighter model for mainstream production, a lighter and weaker material would be likely be used.

Another change in the overall system is the reduction in size. There were significant pockets of empty space within the prototype modules that allowed for leeway with manufacturing mistakes. This space can be reduced drastically in an effort to reduce both the overall size and weight of a single module. Elimination of this “dead space” can reduce the module size by nearly 50% alone.

Also, in order to optimize the design for manufacturability, it is necessary to model the parts with anticipation for full-scale production. This means adding drafts to all walls and adding fillets at corners to anticipate tool geometry for molded parts.

Commercial Feasibility

The goals of this project were developed with the idea of bringing a new technology to market. As such, one aspect to this project was to determine the commercial feasibility of the end-product.

Commercial Application

The final product is a smart actuator, which can be used to transmit relatively small forces in many degrees of freedom in a lightweight system. As described in Chapter 1, one potential commercial application for this project can be found in the world of rehabilitative and assistive devices. Although the result of the project itself is not an assistive device, it can integrate with many existing devices or it can be used in a custom-developed system. Such measures would provide an enhanced user experience from the devices currently available on the market.

There are many common medical conditions that can claim partial or full mobility of a person's body. These conditions include stroke, cerebral palsy, and spinal cord injury. When this happens, signals from the brain fail to trigger the appropriate response from a person's muscles. A robotic assistive device can gather those signals and trigger a response from an artificial muscle instead, allowing victims of such conditions to regain the use of their limbs.

The authors recognize that this is not the only application for the technology, and it is possible that there are many innovative uses for the device spread across many industries. Attempting to address every possible use for a new technology would be a futile effort, and so the following section simply strives to address the commercial feasibility of the product as an assistive device.

Feasibility Analysis

Competitor Benchmarking

Assistive devices that are on the market today generally either help a patient adjust to life without the use of their immobilized appendage(s) or try to amplify brain signals to allow them to reach the muscles in a patient's extremities. Such devices can work well when they are used shortly after a stroke, but their effectiveness wanes as time goes on and the person's muscles begin to degrade. Eventually, the effects of muscle disuse are large enough to render such a device nearly useless. In this case, the patient would need an artificial muscle or a device that actually helps the muscles work.

When a patient uses an assistive device to actually help in the movement of the immobilized limb, such a device typically use a hard exoskeleton which is powered by individual motors. Examples of this include the Myomo mPower 1000, which powers a single electric motor for elbow actuation and uses EMG to control the signal to the system.

A summary of similar products and prices, when available, is below.

Title	Price	Description
Tailwind Arm Rehab device	3195	Simple slide rails to allow for a repetitive motion of the arms. Not assisted, entirely under the users own power
Myomo mPower 1000	Price unavailable	Device currently uses 1 motor per joint, could benefit significantly from OTM
Kinetic Muscle Hand Mentor	Price unavailable	Rehabilitation for hand muscles, not assistive device
BioMove 3000	1695	Amplifies brain signals to achieve muscle movement, doesn't actually provide assistance
Bioness H200	6320	Rehabilitation for hand paralysis
Zynex NeuroMove	4500	Entirely electrical, trains muscles to respond, senses based on EMG
HandMinder	$1000-$2000	Also electrical connection between brain and disabled hand, still in development

As is evident from the table, there are many assistive devices available, but nothing that is lightweight, portable, comfortable, and affordable. The large price range for devices in this field is between $1000 and $10,000. This means that a company that can successfully create an inexpensive assistive device could enjoy large profit margins.

Cost to Manufacture

To develop estimates of manufacturing costs, it is necessary to consider the various processes that are possible to create a finished part. In a low-volume scenario, this is likely to be machining. The design attempted to use off the shelf parts whenever possible in order to reduce the amount of required machining, but when these parts are not available, they must be machined from stock. This is a time intensive process that can cost a lot of money. However, when the demand does not justify the investment required for creating mold tools, it may be the more economical option.

The table below compares the approximate cost of creating all the parts by machining. Machining costs are estimated by taking the approximate time to manufacture the prototype part and multiplying by an estimated hourly rate for a professional machine shop. This is added to the material costs to determine the price per part for machining.

	Number Needed	Low End Estimate	High End estimate	Average
End Cap	2	30	70	50
Case	1	300	500	400
MDS	1	5	15	10
Planetary	1	30	50	40
Drum	1	75	125	100
Springs	1	50	60	55
SDS	1	150	300	225

Brake shoe type 1	2	30	50	40
Brake shoe type 2	2	30	50	40
Servos	2	40	60	50
Solenoid	1	5	20	12.5
Bowden cable	1	5	10	7.5
spring pins (pivots)	1	5	10	7.5
Link	2	5	10	7.5
Lever arm	2	150	225	187.5
Pawl Pivot	1	10	20	15
Brake Mounts	2	125	200	162.5
Solenoid Mount	1	40	60	50
Servo Mounts	1	80	100	90
Flanged Bearings	2	6	15	10.5
Roller Bearings	2	6	15	10.5
SDS support bearing	1	8	15	11.5
	Subtotal	1185	1980	1582.5
Assembly	4	360	480	420
Total manufacturing cost per module		1545	2460	2002.5

For high-volume production, it is more economical to create a mold and manufacture the required parts in the desired geometry. The investment in tooling can cost thousands of dollars per part, but the material costs after that point are several orders of magnitude lower. This is because the main costs are on material and temperature control so that it can be cast.

We can estimate how large demand needs to be in order to justify creating tools for high-volume manufacturing by taking estimates of tooling costs. Most pieces have a relatively simple geometry, and tooling costs can be under roughly $2000. The case would require the most complex tooling, which would entail a tool with multiple pull directions, and may cost about $7500. With the given number of parts, we can estimate the tooling costs to be about $50000 for the entire module. The module has a volume of 12.3 in^3, which corresponds to roughly 1.19 lbs of material. Scaling by a safety factor of 1.5 and multiplying by a cost per unit weight of $0.85/lb for aluminum, this results in a cost of approximately $1.52 per part. It should be noted that not the entire model is made out of aluminum or will even be custom made. As such, these calculations are useful for getting an order of magnitude approximation of cost, not for detailed business planning.

These cost estimates show how ineffective machining would be as a long-term strategy for production of these modules. At only 25 modules, this tradeoff point is reached and it becomes more practical to die cast the parts to their custom shape.

The Path to Commercialization

At this point in the project, it is useful to consider the current state of the product and how it affects the decisions to move forward. The team successfully developed a pilot model of an actuator that can be integrated in a lightweight portable soft exomusculature. The exomusculature and the sensors have not been rigorously developed at this point, so those will be two major tasks for any continuing product development effort.

It would be wise, however, to at least consider the business development of the product concurrently. Customers need to be surveyed to find out if there is actually a demand for such a device, and what aspects of a device are necessary for a first generation product and what can wait. This would allow research and development to focus on the critical aspects of the product and not get caught up in distractions that will reduce the overall time to market.

The product development phase only needs to continue if the team is bringing the product to market independently. It may be more advantageous to approach a company that has a potential use for the product and work out a licensing deal. The actuator could be integrated into a soft orthotic brace already being developed by the company, or it could be used in several other applications that require a powered cable.

An important aspect of commercializing technology is intellectual property protection. This is especially true when licensing the product to another company. While a patent won't protect an idea forever, it will give the inventor adequate time to bring the product to market before allowing for competition.

Future Work

An essential aspect of the engineering design process is iteration. Even if a design fulfills all initial task specifications, there is always room for it to be improved through future generations of design. Subsequent designs can make improvements to mechanism and manufacturing efficiency, and can make updates to the design to account for improvements in technology. The authors recognize that this project is no exception and that there are improvements to be made in the design of this device.

The focus of this project was to construct a device that could meet the task specifications of an anticipated minimum viable product. This meant that the team was driven towards successful design over optimum design. Now that the team's design concepts have been proven, the system can be optimized for a variety of factors.

The next version of this device should focus on three aspects of the project: minimizing the size of the device, increasing system energy efficiency, and reducing the cost to manufacture. Many parts of the system can currently handle far more stress than is expected with the product's use. Reducing the safety factor on these parts will allow for smaller and lighter components. Additionally, using more off-the-shelf parts will allow for reduced manufacturing costs, which is especially desirable when considering that manufacturing volume may initially be low.

To increase system efficiency, the clutches may need to be redesigned. The current clutch control method allows for slip between the rotating components. This translates to extra energy being lost to heat. If the clutches were able to function by pulse control, the clutch would be entirely engaged or disengaged, which would reduce slip and increase efficiency.

There are also improvements that can be made that were outside the scope of this project but will improve the usefulness of the work on OTM up to this point.

The largest research gap for this project is designing a more complex control scheme. Currently, the device is programmed to operate solely for testing purposes; by integrating more sensors, applications for this device can be improved. In particular, one of these more advanced applications is in translating raw signals from the brain into actionable signals for the control system. High density surface electromyography allows brain signals to be read and amplified by electronic equipment, but there is significant work to be done on processing the signals and turning them into useful commands for a robotic system.

Appendix I: Component Part Names and Descriptions

1) Case: Comprised of multiple fixture points to mount band brakes, servos, ratchet pawl and solenoid.

2) Main Drive Shaft (MDS): Main shaft running consecutively through each module. 1/8” steel shaft.

3) Secondary Drive Shaft (SDS): 1/2” Steel shaft designed to interface with the carrier of the planetary gear set (part of clutch 1) and power spring(part of energy storage device), serve as the ratchet wheel of the ratchet pawl system, and rotate about the MDS on bearings.

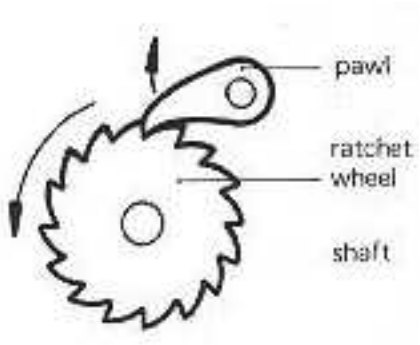

Source: http://www.chaoticsynapticactivity.com/images/ratchet_pawl.jpg

4) Energy Storage Device (ESD): Interfaces with the SDS through a flange on the innermost coil of the power spring. The ESD is joined with the cable drum as a solid part from aluminum.

5) Cable Drum: Serves as the location for Bowden cable to spool onto. Was changed in later designs to allow for a less aggressive angle of entry.

6) Bowden Cable: Exited surface of cable drum perpendicularly. Passed through hole drilled into hole containing bearings for MDS.

7) Band Brake: Sub-assembly of both clutches. Composed of two external brake shoes, a lever arm to apply force, and actuated by an externally mounted servo to the case.

8) Clutch 1: Utilizes band brakes to stall the case of a constantly rotating planetary gear set. The SDS is engaged to the carrier of the gear set. While the clutch is not engaged, the ring gear is allowed to freely spin opposite the direction of the sun gear. When engaged, the ring is stalled forcing the planets to rotate and accordingly driving the SDS. This begins to impart energy in the ESD.

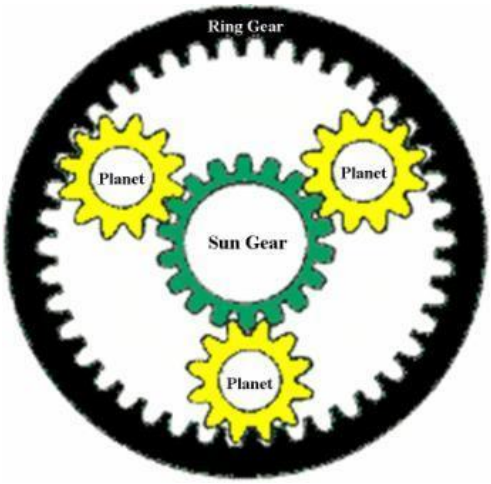

Source: http://appauto.files.wordpress.com/2008/01/planetarygearset.jpg

9) Clutch 2: Utilizes a band brake to control the motion of the cable drum. When fully engaged, clutch 2 allows for the module to be charged, and through slow release of the servo can control the amount of force applied through the system.

10) Ratchet Pawl: Serves to prevent back-drive of the SDS and accordingly allows for energy to be stored without power input. Every 60° rotation of the SDS steps one tooth forward on the ratchet surface. Is engaged with ratchet surface at all times except during system resets. Disengaged through activation of a solenoid.

11) Bearing Block: When energy is stored in the system through use of the ratchet pawl, a large tangential force is applied to the SDS. This causes unnecessary bending in the MDS and friction between the MDS and SDS. The bearing block is a bearing about the SDS such that its position is absolute within the system.

Appendix II: Mechanical Drawings

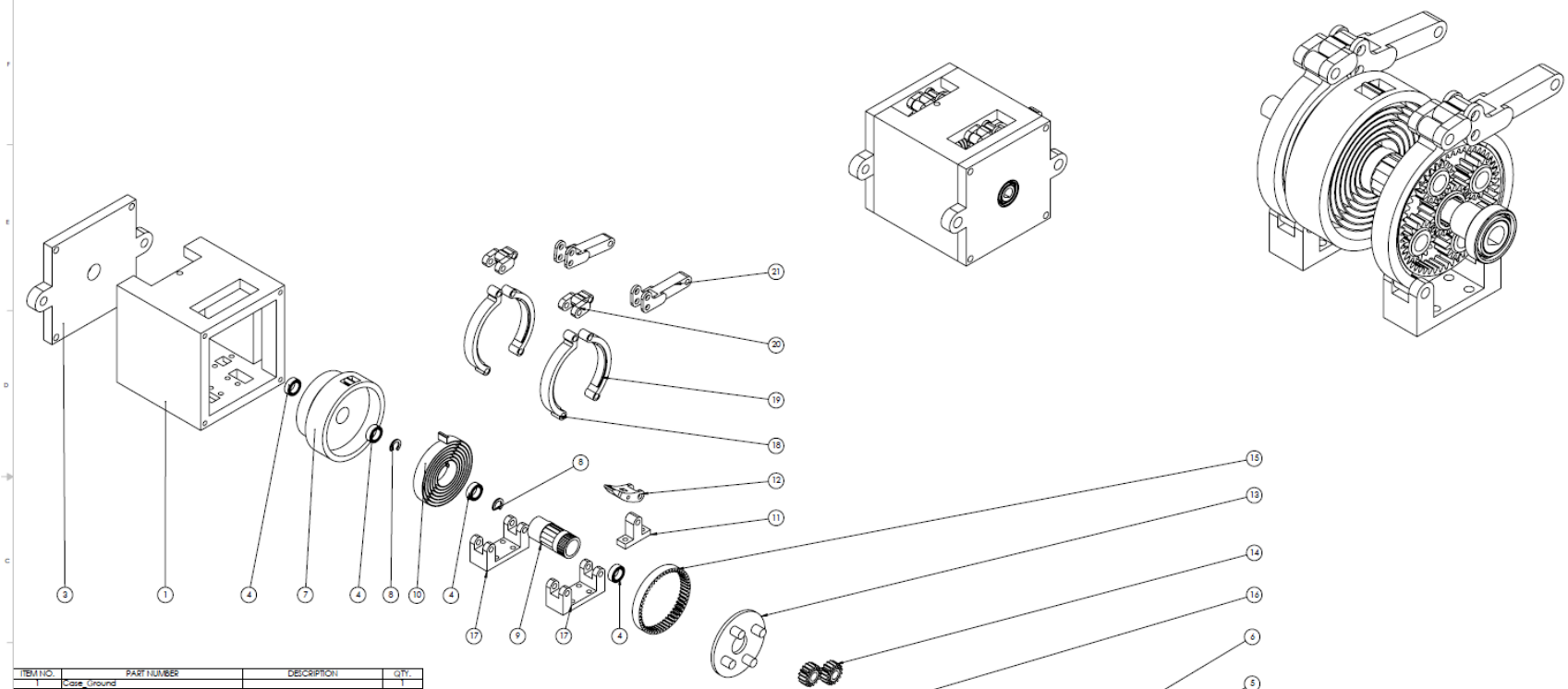

ITEM NO.	PART NUMBER	DESCRIPTION	QTY.
1	Case_Ground		1
2	Case_Cap_.5bore		1
3	Case_Cap		1
4	AFBMA 12.2 - 0.2500 - 0.3750 - 0.1250 - 20,DE,AC,20		5
5	AFBMA 12.2 - 0.3750 - 0.6250 - 0.1562 - 16,DE,AC,16		1
6	MDS_Component		1
7	MESD_Outer		1
8	MDS_snapring		2
9	MESD Inner		1
10	spring coil		1
11	pawl_pivot		1
12	Pawl arm		1
13	User Library-Gears Planetary_Suporte Planetario		1
14	User Library-Gears Planetary_Gear M2.75 - Z16		4
15	User Library-Gears Planetary_Coroa Interna M2.75 - Z56		1
16	User Library-Gears Planetary_Gear M2.75 - Z20		1
17	Band_Brake_Mount_Planetary		2
18	Brake_Shoe		2
19	Brake_Shoe_Lever_Side		2
20	Brake_Link		2
21	Brake_Lever		2

UNLESS OTHERWISE SPECIFIED:
DIMENSIONS ARE IN INCHES
TOLERANCES:
FRACTIONAL ±
ANGULAR: MACH ± BEND ±
TWO PLACE DECIMAL ±
THREE PLACE DECIMAL ±
INTERPRET GEOMETRIC TOLERANCING PER:
MATERIAL:
FINISH:

	NAME	DATE
DRAWN		
CHECKED		
ENG APPR.		
MFG APPR.		
Q.A.		
COMMENTS:		

TITLE:

PROPRIETARY AND CONFIDENTIAL
THIS INFORMATION CONTAINED IN THIS DRAWING IS THE SOLE PROPERTY OF <INSERT COMPANY NAME HERE>. ANY REPRODUCTION IN PART OR AS A WHOLE WITHOUT THE WRITTEN PERMISSION OF <INSERT COMPANY NAME HERE> IS PROHIBITED.

NEXT ASSY | USED ON
APPLICATION

SIZE D | DWG. NO. Assem_V2 | REV
SCALE: 1:1 | WEIGHT: | SHEET 1 OF 1

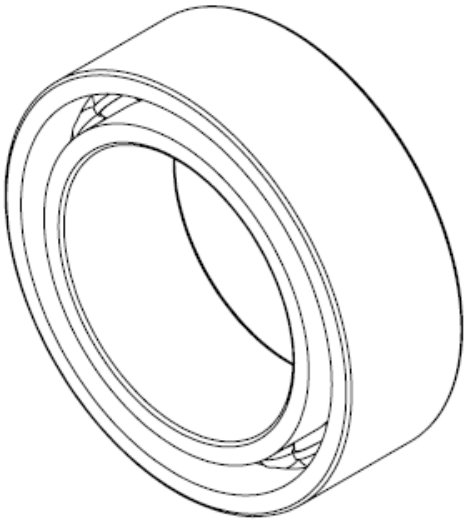

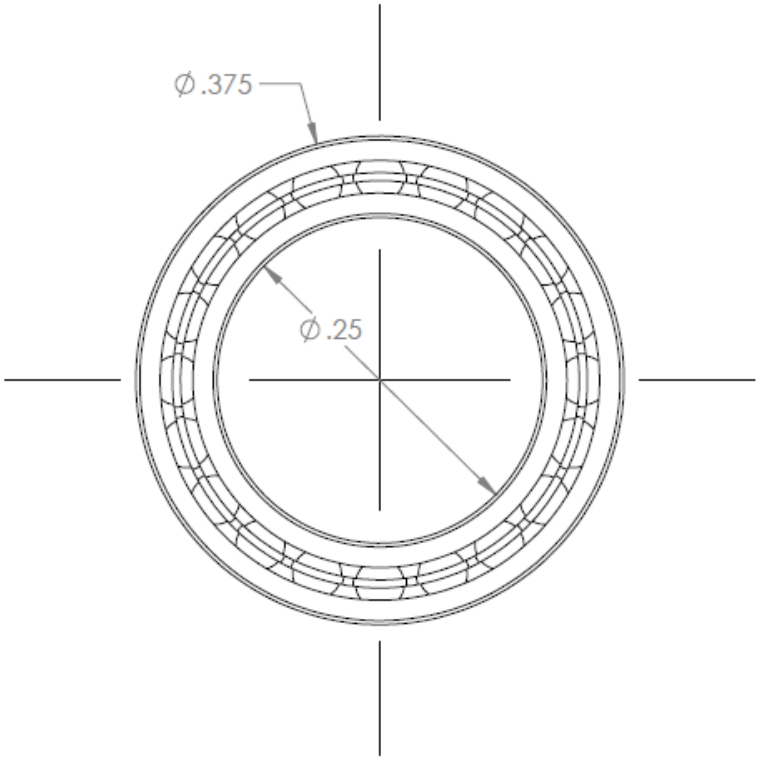

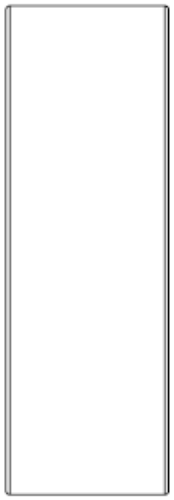

		DIMENSIONS ARE IN INCHES TOLERANCES: FRACTIONAL ± ANGULAR: MACH ± BEND ± TWO PLACE DECIMAL ± THREE PLACE DECIMAL ±		NAME	DATE
			DRAWN		
			CHECKED		
			ENG APPR.		
			MFG APPR.		
			Q.A.		
		MATERIAL	COMMENTS:		
NEXT ASSY	USED ON	FINISH			
APPLICATION		DO NOT SCALE DRAWING			

PROPRIETARY AND CONFIDENTIAL

THE INFORMATION CONTAINED IN THIS DRAWING IS THE SOLE PROPERTY OF <INSERT COMPANY NAME HERE>. ANY REPRODUCTION IN PART OR AS A WHOLE WITHOUT THE WRITTEN PERMISSION OF <INSERT COMPANY NAME HERE> IS PROHIBITED.

SIZE	DWG. NO.	REV.
A	.25 ID .375 OD Bearing	
SCALE:8:1	WEIGHT:	SHEET 1 OF 1

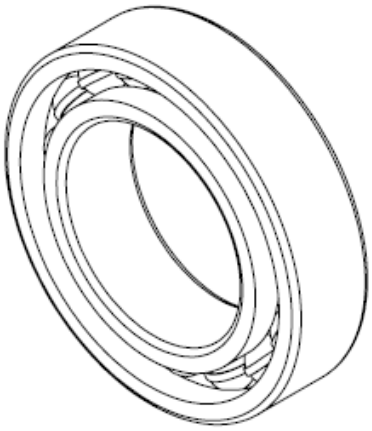

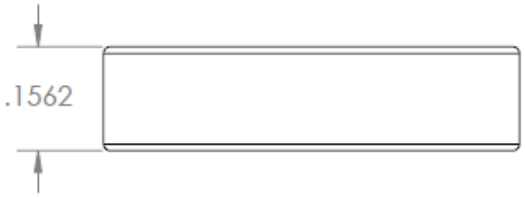

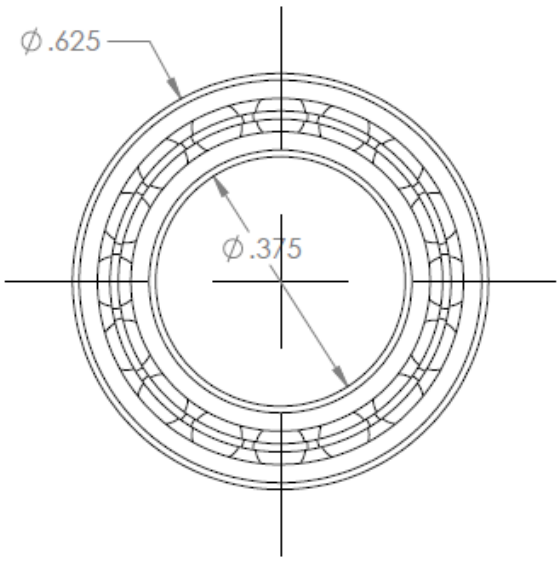

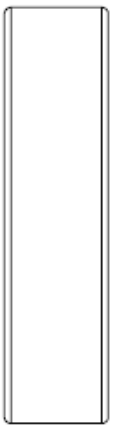

		DIMENSIONS ARE IN INCHES TOLERANCES: FRACTIONAL± ANGULAR: MACH± BEND ± TWO PLACE DECIMAL ± THREE PLACE DECIMAL ±		NAME	DATE
			DRAWN		
			CHECKED		
			ENG APPR.		
			MFG APPR.		
		MATERIAL	Q.A.		
			COMMENTS:		
NEXT ASSY	USED ON	FINISH			
APPLICATION		DO NOT SCALE DRAWING			

PROPRIETARY AND CONFIDENTIAL

THE INFORMATION CONTAINED IN THIS DRAWING IS THE SOLE PROPERTY OF <INSERT COMPANY NAME HERE>. ANY REPRODUCTION IN PART OR AS A WHOLE WITHOUT THE WRITTEN PERMISSION OF <INSERT COMPANY NAME HERE> IS PROHIBITED.

SIZE	DWG. NO.	REV.
A	.375 ID .625 OD Bearing	
SCALE:4:1	WEIGHT:	SHEET 1 OF 1

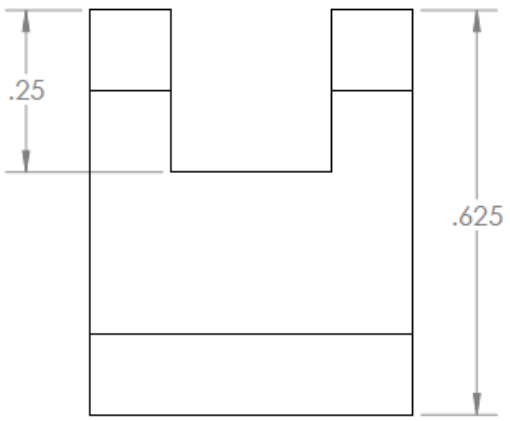

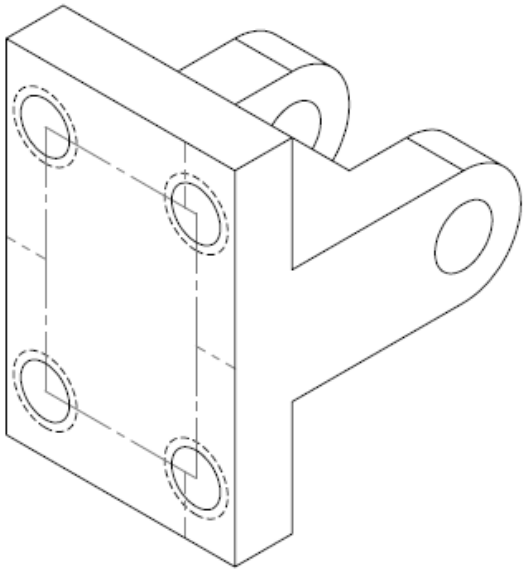

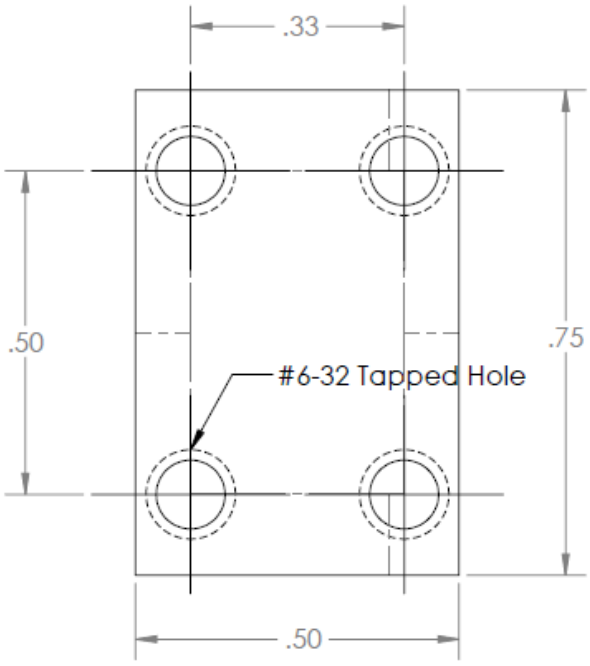

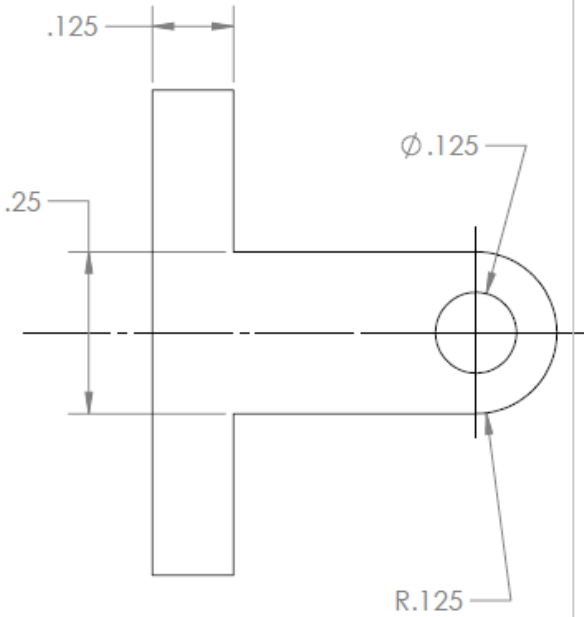

		DIMENSIONS ARE IN INCHES TOLERANCES: FRACTIONAL ± ANGULAR: MACH ± BEND ± TWO PLACE DECIMAL ± THREE PLACE DECIMAL ±		NAME	DATE
			DRAWN		
			CHECKED		
			ENG APPR.		
			MFG APPR.		
			Q.A.		
		MATERIAL	COMMENTS:		
NEXT ASSY	USED ON	FINISH			
APPLICATION		DO NOT SCALE DRAWING			

PROPRIETARY AND CONFIDENTIAL

THE INFORMATION CONTAINED IN THIS DRAWING IS THE SOLE PROPERTY OF <INSERT COMPANY NAME HERE>. ANY REPRODUCTION IN PART OR AS A WHOLE WITHOUT THE WRITTEN PERMISSION OF <INSERT COMPANY NAME HERE> IS PROHIBITED.

SIZE	DWG. NO.	REV.
A	Band_Brake_Mount	
SCALE:4:1	WEIGHT:	SHEET 1 OF 1

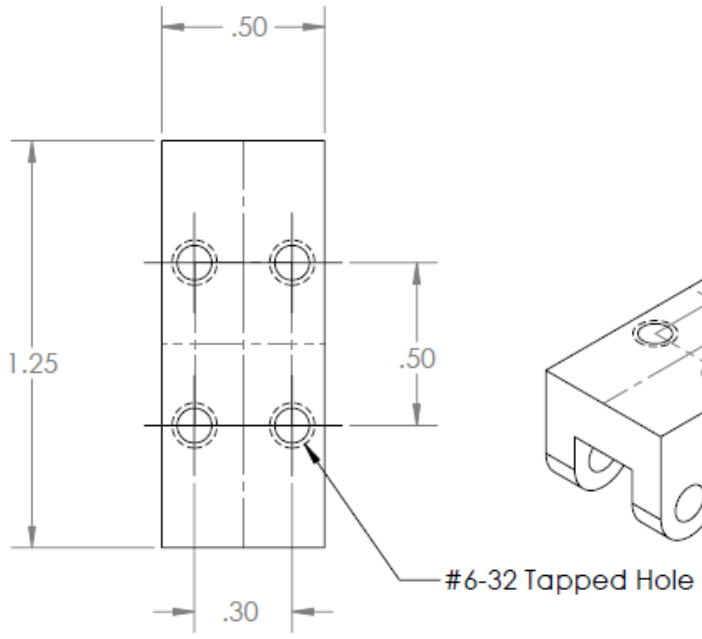

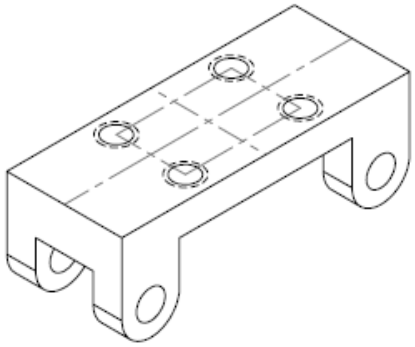

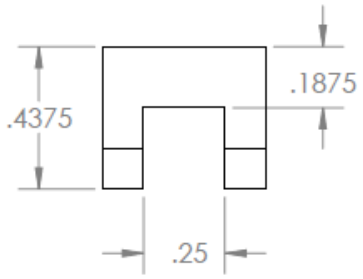

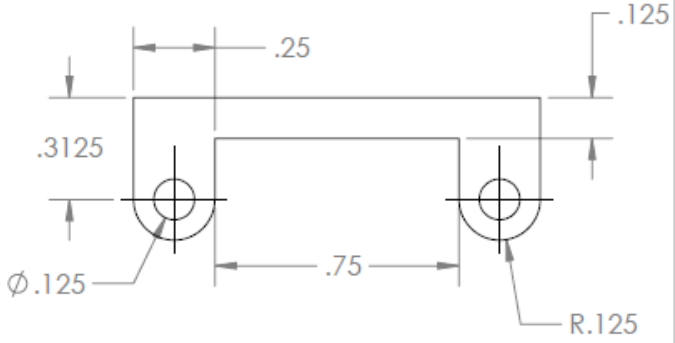

		DIMENSIONS ARE IN INCHES TOLERANCES: FRACTIONAL± ANGULAR: MACH± BEND ± TWO PLACE DECIMAL ± THREE PLACE DECIMAL ±		NAME	DATE	
			DRAWN			
			CHECKED			
			ENG APPR.			
			MFG APPR.			
			Q.A.			
		MATERIAL	COMMENTS:			
NEXT ASSY	USED ON	FINISH				
APPLICATION		DO NOT SCALE DRAWING				

PROPRIETARY AND CONFIDENTIAL

THE INFORMATION CONTAINED IN THIS DRAWING IS THE SOLE PROPERTY OF <INSERT COMPANY NAME HERE>. ANY REPRODUCTION IN PART OR AS A WHOLE WITHOUT THE WRITTEN PERMISSION OF <INSERT COMPANY NAME HERE> IS PROHIBITED.

SIZE	DWG. NO.	REV.
A	Band_Brake_Mount_MESD	
SCALE:2:1	WEIGHT:	SHEET 1 OF 1

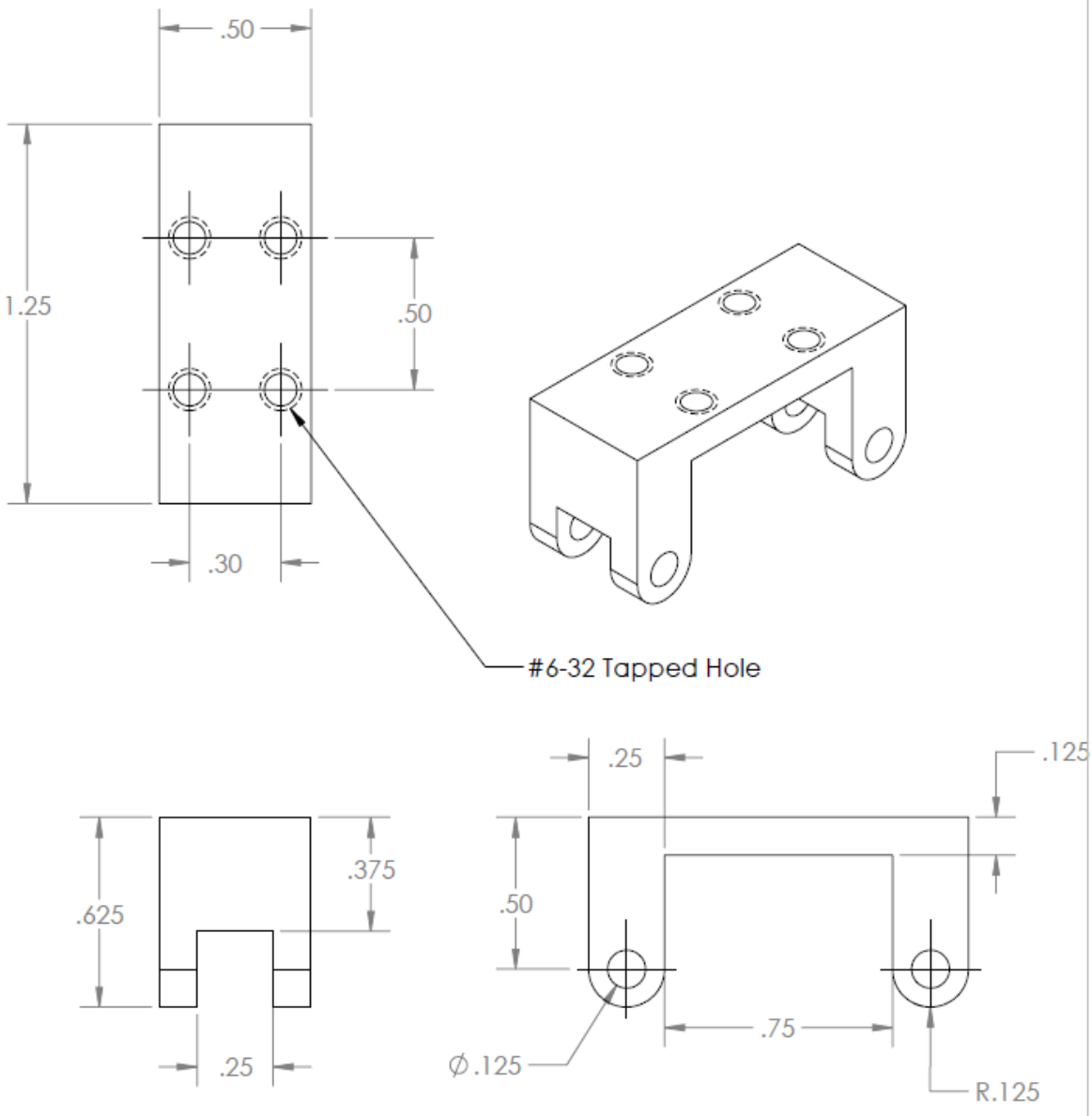

		DIMENSIONS ARE IN INCHES TOLERANCES: FRACTIONAL ± ANGULAR: MACH ± BEND ± TWO PLACE DECIMAL ± THREE PLACE DECIMAL ±		NAME	DATE
			DRAWN		
			CHECKED		
			ENG APPR.		
			MFG APPR.		
			Q.A.		
		MATERIAL	COMMENTS:		
NEXT ASSY	USED ON	FINISH			
APPLICATION		DO NOT SCALE DRAWING			

PROPRIETARY AND CONFIDENTIAL
THE INFORMATION CONTAINED IN THIS DRAWING IS THE SOLE PROPERTY OF <INSERT COMPANY NAME HERE>. ANY REPRODUCTION IN PART OR AS A WHOLE WITHOUT THE WRITTEN PERMISSION OF <INSERT COMPANY NAME HERE> IS PROHIBITED.

SIZE	DWG. NO.	REV.
A	Band_Brake_Mount_Planetary	
SCALE:2:1	WEIGHT:	SHEET 1 OF 1

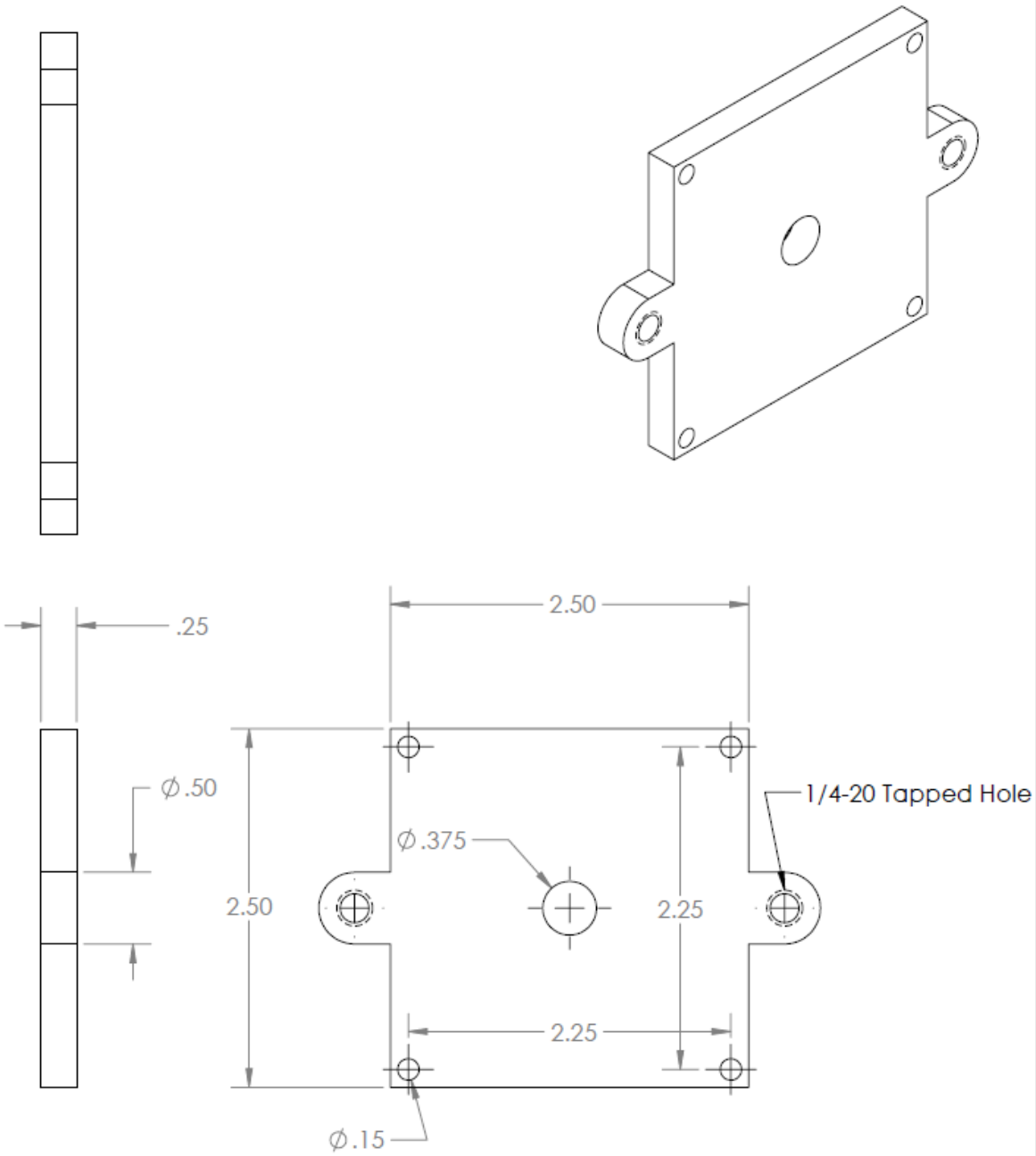

		DIMENSIONS ARE IN INCHES TOLERANCES: FRACTIONAL ± ANGULAR: MACH ± BEND ± TWO PLACE DECIMAL ± THREE PLACE DECIMAL ±		NAME	DATE
			DRAWN		
			CHECKED		
			ENG APPR.		
			MFG APPR.		
		MATERIAL	Q.A.		
			COMMENTS:		
NEXT ASSY	USED ON	FINISH			
APPLICATION		DO NOT SCALE DRAWING			

SIZE A	DWG. NO. Case_Cap	REV.
SCALE:1:1	WEIGHT:	SHEET 1 OF 1

PROPRIETARY AND CONFIDENTIAL

THE INFORMATION CONTAINED IN THIS DRAWING IS THE SOLE PROPERTY OF <INSERT COMPANY NAME HERE>. ANY REPRODUCTION IN PART OR AS A WHOLE WITHOUT THE WRITTEN PERMISSION OF <INSERT COMPANY NAME HERE> IS PROHIBITED.

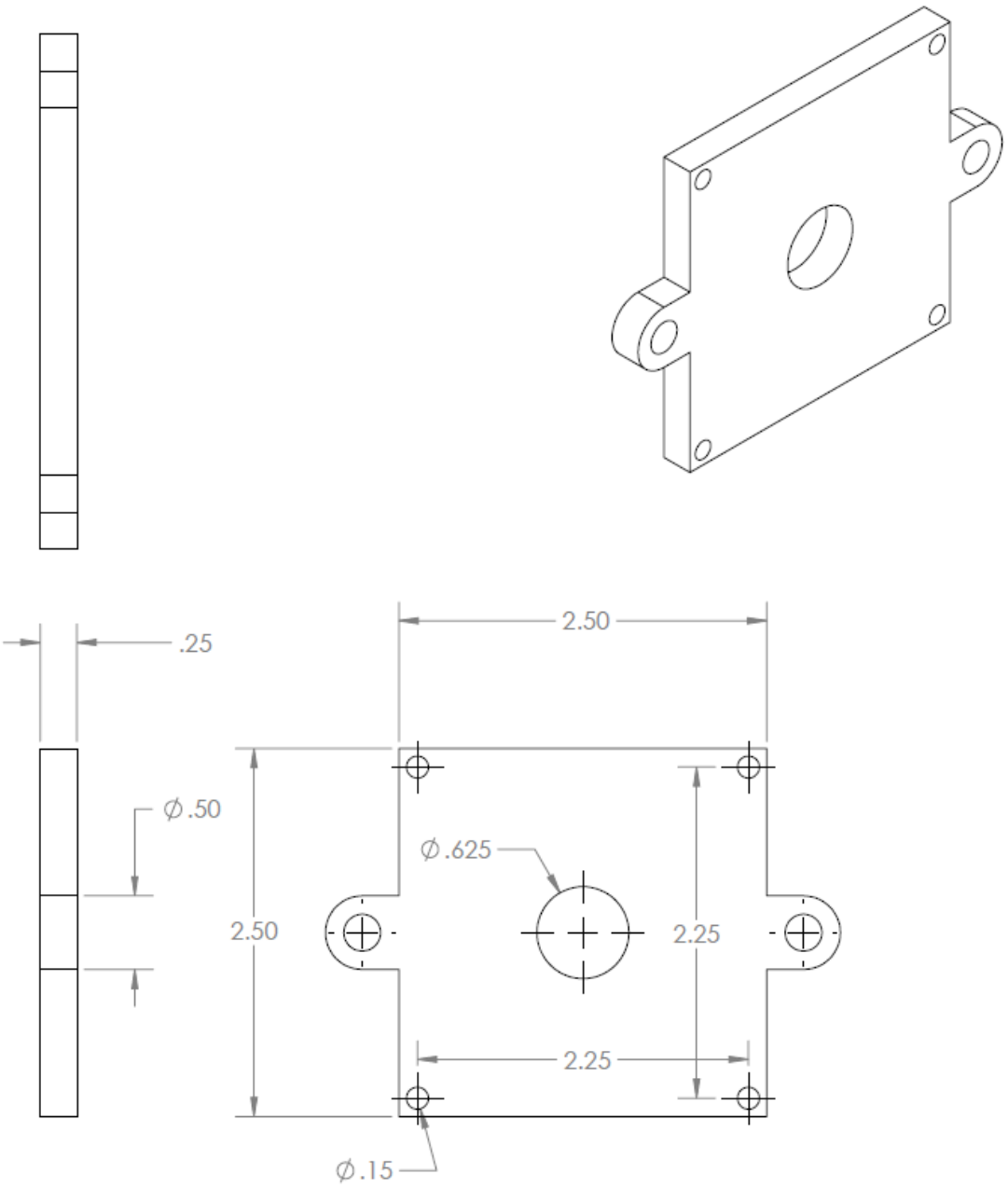

		DIMENSIONS ARE IN INCHES TOLERANCES: FRACTIONAL ± ANGULAR: MACH ± BEND ± TWO PLACE DECIMAL ± THREE PLACE DECIMAL ±		NAME	DATE
			DRAWN		
			CHECKED		
			ENG APPR.		
			MFG APPR.		
		MATERIAL	Q.A.		
			COMMENTS:		
NEXT ASSY	USED ON	FINISH			
APPLICATION		DO NOT SCALE DRAWING			

PROPRIETARY AND CONFIDENTIAL

THE INFORMATION CONTAINED IN THIS DRAWING IS THE SOLE PROPERTY OF <INSERT COMPANY NAME HERE>. ANY REPRODUCTION IN PART OR AS A WHOLE WITHOUT THE WRITTEN PERMISSION OF <INSERT COMPANY NAME HERE> IS PROHIBITED.

SIZE	DWG. NO.	REV.
A	Case_Cap_.5bore	
SCALE:1:1	WEIGHT:	SHEET 1 OF 1

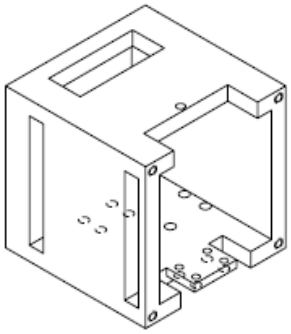

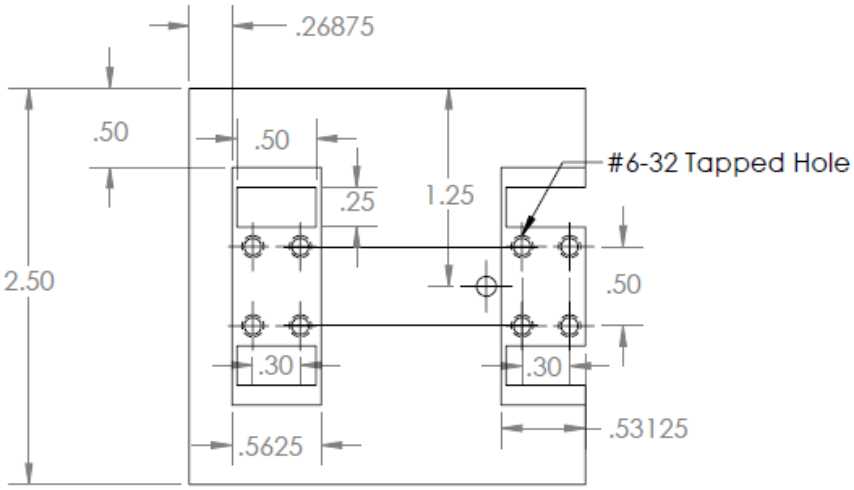

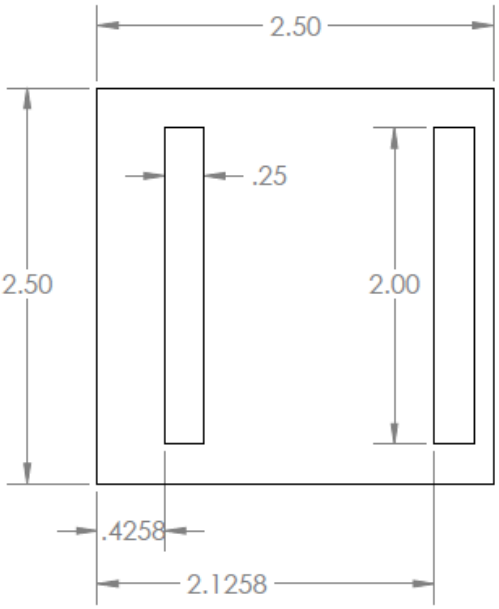

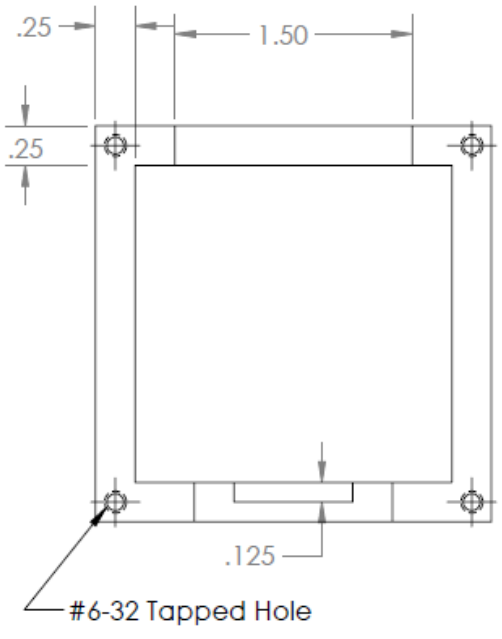

		DIMENSIONS ARE IN INCHES TOLERANCES: FRACTIONAL ± ANGULAR: MACH ± BEND ± TWO PLACE DECIMAL ± THREE PLACE DECIMAL ±		NAME	DATE
			DRAWN		
			CHECKED		
			ENG APPR.		
			MFG APPR.		
		MATERIAL	Q.A.		
			COMMENTS:		
NEXT ASSY	USED ON	FINISH			
APPLICATION		DO NOT SCALE DRAWING			

PROPRIETARY AND CONFIDENTIAL
THE INFORMATION CONTAINED IN THIS DRAWING IS THE SOLE PROPERTY OF <INSERT COMPANY NAME HERE>. ANY REPRODUCTION IN PART OR AS A WHOLE WITHOUT THE WRITTEN PERMISSION OF <INSERT COMPANY NAME HERE> IS PROHIBITED.

SIZE	DWG. NO.	REV.
A	Case_Ground	
SCALE:1:2	WEIGHT:	SHEET 1 OF 1

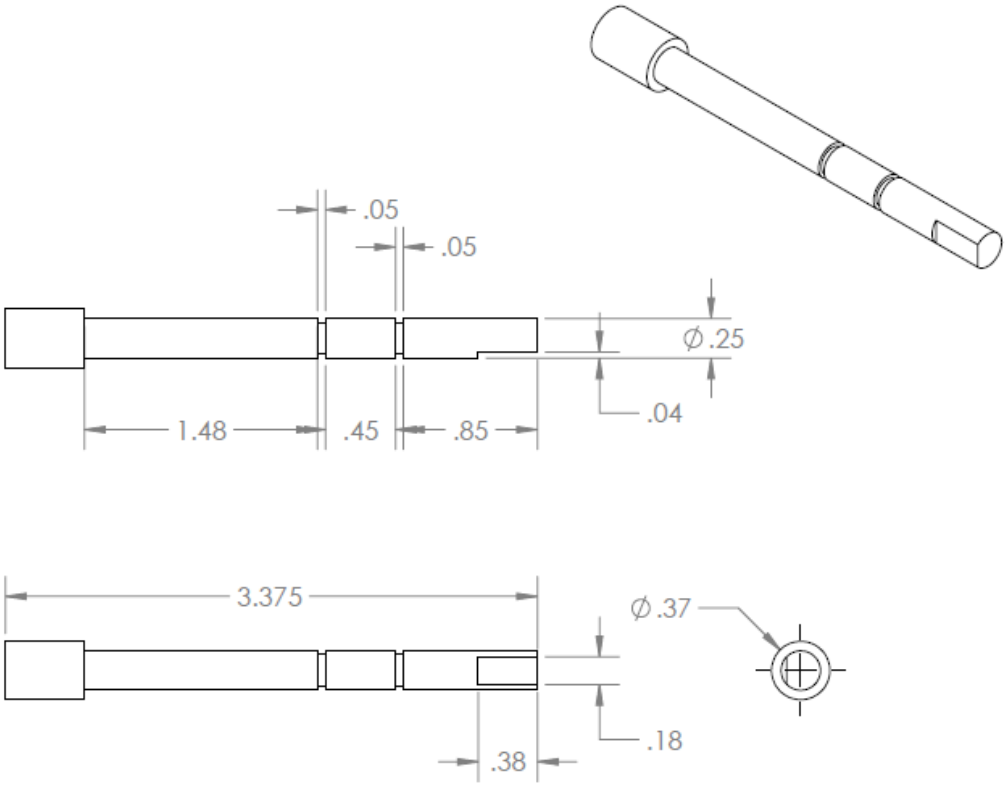

		DIMENSIONS ARE IN INCHES TOLERANCES: FRACTIONAL ± ANGULAR: MACH ± BEND ± TWO PLACE DECIMAL ± THREE PLACE DECIMAL ±		NAME	DATE
			DRAWN		
			CHECKED		
			ENG APPR.		
			MFG APPR.		
		MATERIAL	Q.A.		
			COMMENTS:		
NEXT ASSY	USED ON	FINISH			
APPLICATION		DO NOT SCALE DRAWING			

PROPRIETARY AND CONFIDENTIAL

THE INFORMATION CONTAINED IN THIS DRAWING IS THE SOLE PROPERTY OF <INSERT COMPANY NAME HERE>. ANY REPRODUCTION IN PART OR AS A WHOLE WITHOUT THE WRITTEN PERMISSION OF <INSERT COMPANY NAME HERE> IS PROHIBITED.

SIZE	DWG. NO.	REV.
A	MDS_Component	
SCALE:1:1	WEIGHT:	SHEET 1 OF 1

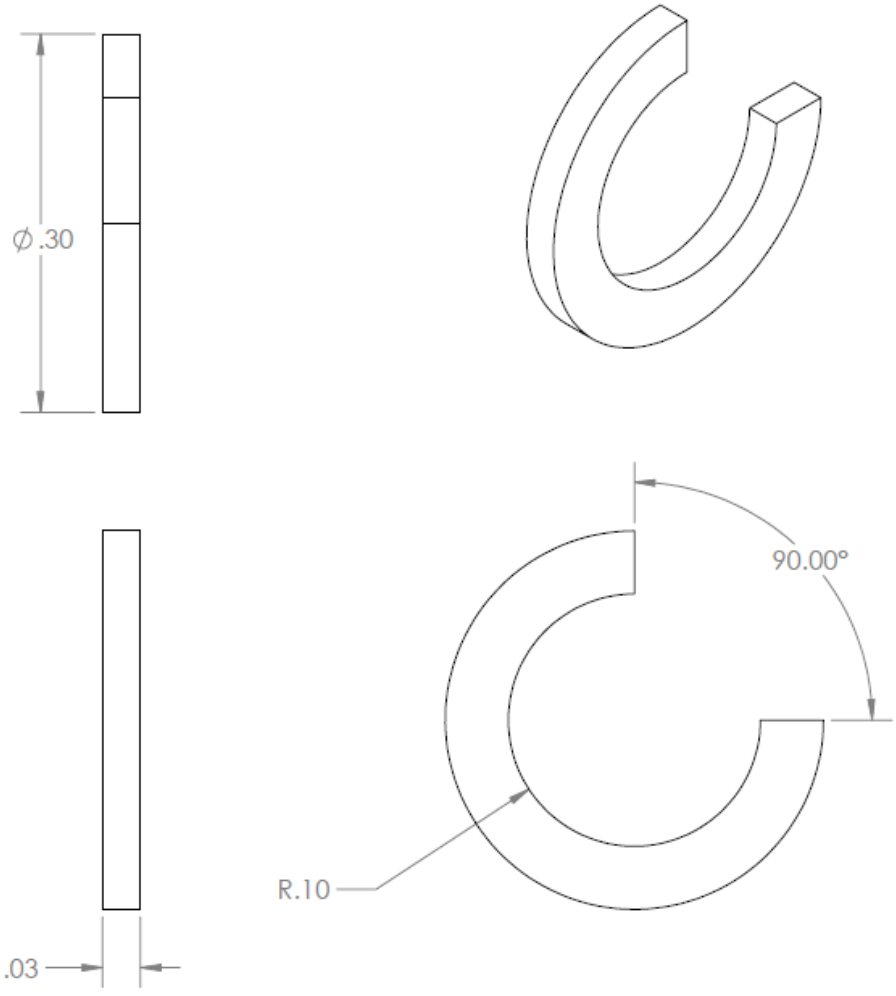

		DIMENSIONS ARE IN INCHES TOLERANCES: FRACTIONAL ± ANGULAR: MACH ± BEND ± TWO PLACE DECIMAL ± THREE PLACE DECIMAL ±		NAME	DATE
			DRAWN		
			CHECKED		
			ENG APPR.		
			MFG APPR.		
		MATERIAL	Q.A.		
			COMMENTS:		
NEXT ASSY	USED ON	FINISH			
APPLICATION		DO NOT SCALE DRAWING			

PROPRIETARY AND CONFIDENTIAL

THE INFORMATION CONTAINED IN THIS DRAWING IS THE SOLE PROPERTY OF <INSERT COMPANY NAME HERE>. ANY REPRODUCTION IN PART OR AS A WHOLE WITHOUT THE WRITTEN PERMISSION OF <INSERT COMPANY NAME HERE> IS PROHIBITED.

SIZE	DWG. NO.	REV.
A	MDS_snapring	
SCALE:8:1	WEIGHT:	SHEET 1 OF 1

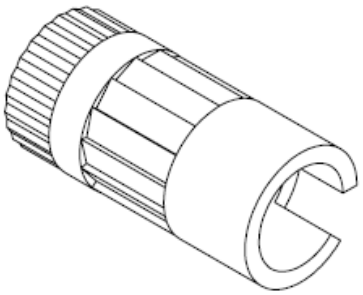

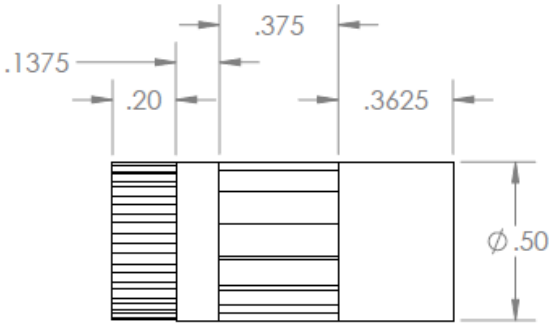

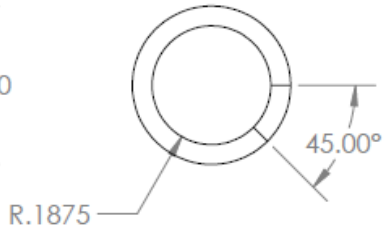

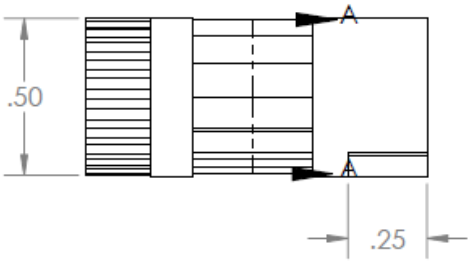

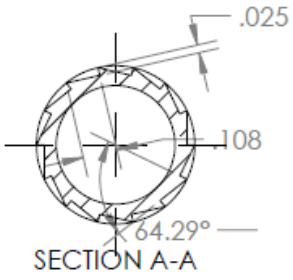

		DIMENSIONS ARE IN INCHES TOLERANCES: FRACTIONAL ± ANGULAR: MACH ± BEND ± TWO PLACE DECIMAL ± THREE PLACE DECIMAL ±		NAME	DATE
			DRAWN		
			CHECKED		
			ENG APPR.		
			MFG APPR.		
		MATERIAL	Q.A.		
NEXT ASSY	USED ON	FINISH	COMMENTS:		
APPLICATION		DO NOT SCALE DRAWING			

PROPRIETARY AND CONFIDENTIAL
THE INFORMATION CONTAINED IN THIS DRAWING IS THE SOLE PROPERTY OF <INSERT COMPANY NAME HERE>. ANY REPRODUCTION IN PART OR AS A WHOLE WITHOUT THE WRITTEN PERMISSION OF <INSERT COMPANY NAME HERE> IS PROHIBITED.

SIZE	DWG. NO.	REV.
A	MESD Inner	
SCALE:2:1	WEIGHT:	SHEET 1 OF 1

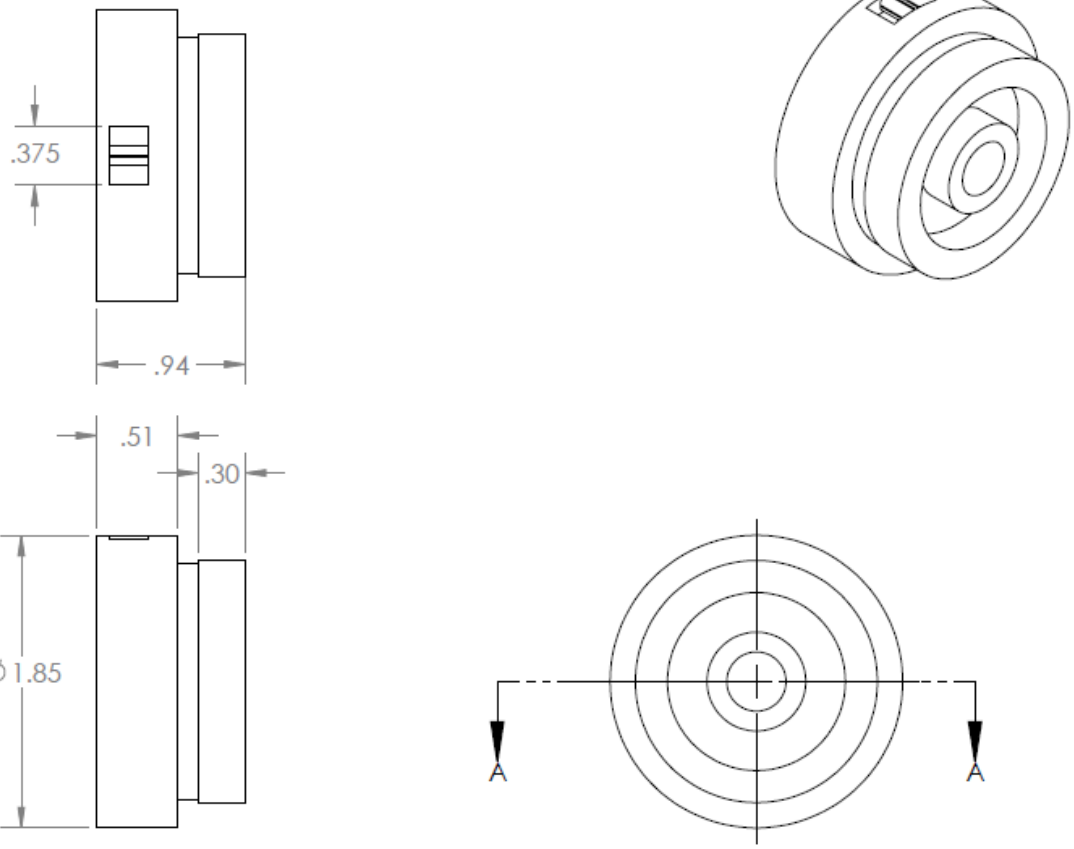

		DIMENSIONS ARE IN INCHES TOLERANCES: FRACTIONAL ± ANGULAR: MACH ± BEND ± TWO PLACE DECIMAL ± THREE PLACE DECIMAL ±		NAME	DATE
			DRAWN		
			CHECKED		
			ENG APPR.		
			MFG APPR.		
		MATERIAL	Q.A.		
			COMMENTS:		
NEXT ASSY	USED ON	FINISH			
APPLICATION		DO NOT SCALE DRAWING			

PROPRIETARY AND CONFIDENTIAL
THE INFORMATION CONTAINED IN THIS DRAWING IS THE SOLE PROPERTY OF <INSERT COMPANY NAME HERE>. ANY REPRODUCTION IN PART OR AS A WHOLE WITHOUT THE WRITTEN PERMISSION OF <INSERT COMPANY NAME HERE> IS PROHIBITED.

SIZE	DWG. NO.	REV.
A	MESD_Outer	
SCALE:1:1	WEIGHT:	SHEET 1 OF 1

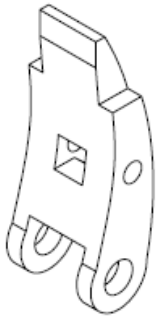

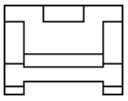

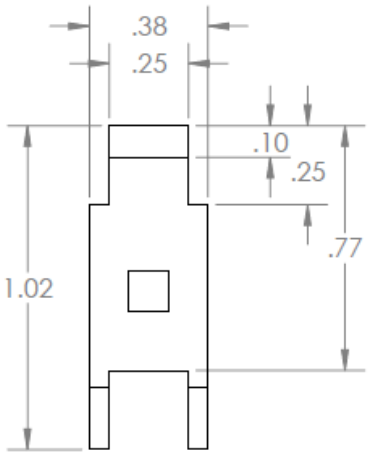

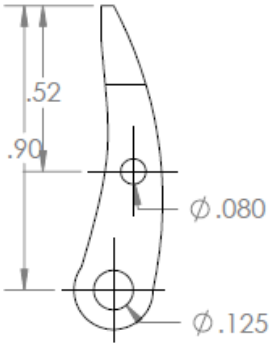

		DIMENSIONS ARE IN INCHES TOLERANCES: FRACTIONAL ± ANGULAR: MACH ± BEND ± TWO PLACE DECIMAL ± THREE PLACE DECIMAL ±		NAME	DATE
			DRAWN		
			CHECKED		
			ENG APPR.		
			MFG APPR.		
		MATERIAL	Q.A.		
			COMMENTS:		
NEXT ASSY	USED ON	FINISH			
APPLICATION		DO NOT SCALE DRAWING			

PROPRIETARY AND CONFIDENTIAL
THE INFORMATION CONTAINED IN THIS DRAWING IS THE SOLE PROPERTY OF <INSERT COMPANY NAME HERE>. ANY REPRODUCTION IN PART OR AS A WHOLE WITHOUT THE WRITTEN PERMISSION OF <INSERT COMPANY NAME HERE> IS PROHIBITED.

SIZE	DWG. NO.	REV.
A	Pawl_arm	
SCALE:2:1	WEIGHT:	SHEET 1 OF 1

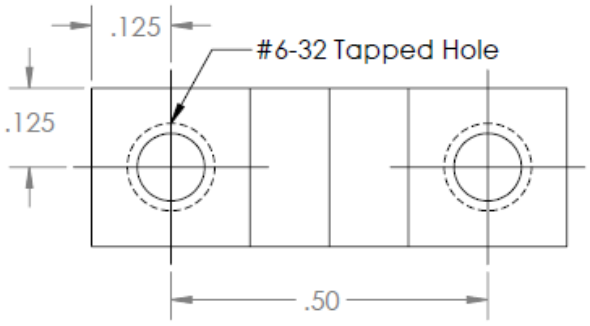

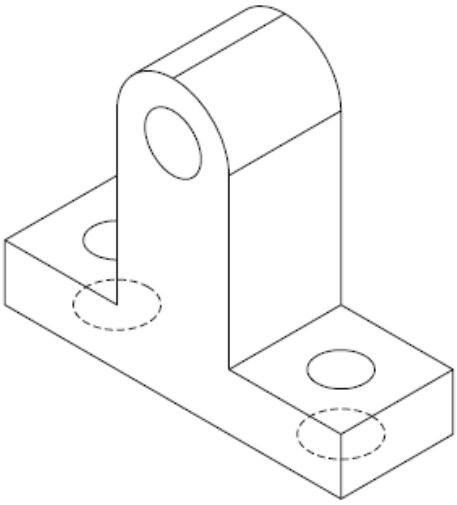

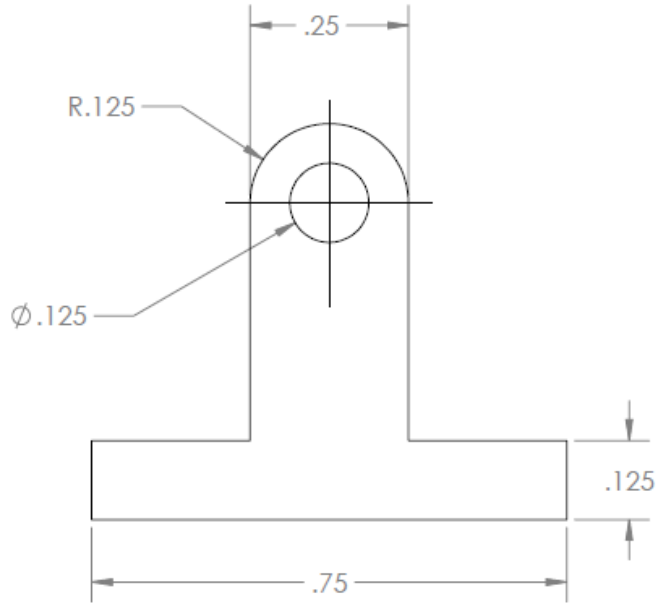

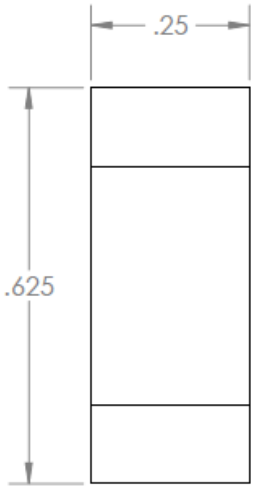

		DIMENSIONS ARE IN INCHES TOLERANCES: FRACTIONAL ± ANGULAR: MACH ± BEND ± TWO PLACE DECIMAL ± THREE PLACE DECIMAL ±		NAME	DATE
			DRAWN		
			CHECKED		
			ENG APPR.		
			MFG APPR.		
		MATERIAL	Q.A.		
			COMMENTS:		
NEXT ASSY	USED ON	FINISH			
APPLICATION		DO NOT SCALE DRAWING			

PROPRIETARY AND CONFIDENTIAL

THE INFORMATION CONTAINED IN THIS DRAWING IS THE SOLE PROPERTY OF <INSERT COMPANY NAME HERE>. ANY REPRODUCTION IN PART OR AS A WHOLE WITHOUT THE WRITTEN PERMISSION OF <INSERT COMPANY NAME HERE> IS PROHIBITED.

SIZE	DWG. NO.	REV.
A	pawl_pivot	
SCALE:4:1	WEIGHT:	SHEET 1 OF 1

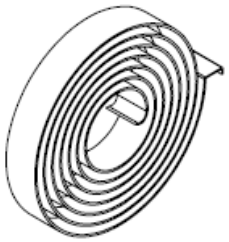

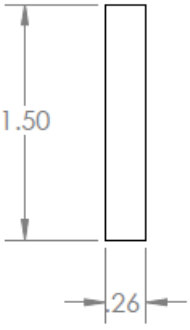

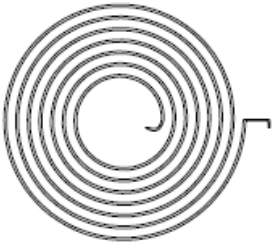

		DIMENSIONS ARE IN INCHES TOLERANCES: FRACTIONAL ± ANGULAR: MACH ± BEND ± TWO PLACE DECIMAL ± THREE PLACE DECIMAL ±		NAME	DATE
			DRAWN		
			CHECKED		
			ENG APPR.		
			MFG APPR.		
		MATERIAL	Q.A.		
			COMMENTS:		
NEXT ASSY	USED ON	FINISH			
APPLICATION		DO NOT SCALE DRAWING			

SIZE A	DWG. NO. spring coil	REV.
SCALE:1:1	WEIGHT:	SHEET 1 OF 1

PROPRIETARY AND CONFIDENTIAL

THE INFORMATION CONTAINED IN THIS DRAWING IS THE SOLE PROPERTY OF <INSERT COMPANY NAME HERE>. ANY REPRODUCTION IN PART OR AS A WHOLE WITHOUT THE WRITTEN PERMISSION OF <INSERT COMPANY NAME HERE> IS PROHIBITED.

Appendix III: Code

```
#include <Servo.h> //include servo package
Servo brake[10]; // Set up maximum of 10 brakes (2 per module)
//int wait = 2000; //Pause for 'wait' milliseconds before resuming the loop
int number_of_modules;
//Initial Position Values
int closePos = 0;
int openPos = 145;

//Variable Speed Release Calculations
int releaseSpeed = 100;//Percentage 0-100%
int releasePos = releaseSpeed;//algorithm for position based on
percentage****get math for band brakes and angles/positions for servos

//Task Scheduler
unsigned long currentTime = millis();
long chargeTime = 26600;
long releaseTime = 5000;

long cycleCheckMod[1];
boolean modCharged[1];
boolean isCharging[1];
volatile int buttonPressed[1];


//initialize modules
void initMods(int numMods) {
  if (0 < numMods <= 3){
    for(int x=0; x<numMods; x++){
      int y = x+1;

      int u = x+4;
      int v = y+4;

      //Initialize Brakes per number of modules
      brake[x].attach(u);
      brake[y].attach(v);
      //set up Input/Output pinouts for solenoids and module triggers
      int pinOut = 22;
      int pinIn = pinOut + numMods*2;
      pinMode(pinOut, OUTPUT);
      pinMode(pinIn, INPUT);
      pinOut+2;
      pinIn+2;
    }
      //Initialize Number of Mods for Task Manager
    for(int x=0; x<numMods; x++){
      cycleCheckMod[x]=0;
      modCharged[x]=false;
      isCharging[x]=false;
      buttonPressed[x]=LOW;
    }

    pinMode(2, INPUT);
```

```
    pinMode(3, INPUT);
  }
  else{
    Serial.println("Too Many Modules");
  }
}

//Charge Module (mod number)
void startChargeMod(int a){
 cycleCheckMod[a-1] = currentTime;
 isCharging[a-1] = true;
 int b1 = (a-1)*2;
 int b2 = b1+1;
 int s1 = b1+22;

 brake[b1].write(closePos);
 brake[b2].write(closePos);
 digitalWrite(s1, LOW);
}

void stopChargeMod(int b){
  int b1 = (b-1)*2;
  int b2 = b1+1;
  int s1 = b1+22;
  brake[b1].write(openPos);
  modCharged[b-1]=true;
}

//Release Module (mod number)
void releaseMod(int c){
 //cycleCheckMod[b-1] = currentTime;
 int b1 = (c - 1)*2;
 int b2 = b1+1;
 int s1 = b1+22;
 //All of these happen at the same time
 brake[b1].write(openPos);
 brake[b2].write(releasePos);
 digitalWrite(s1, LOW);

}

void resetMod(int d){
  int b1 = (d - 1)*2;
  int b2 = b1+1;
  int s1 = b1+22;
  brake[b1].write(closePos);////may have to switch to openPos
  digitalWrite(s1, HIGH);
  delay(1000);
  brake[b1].write(openPos);////may have to switch to closePos
  cycleCheckMod[d-1]=0;
  modCharged[d-1]=false;
}

void changeState(){
  buttonPressed[0] = !buttonPressed[0];
}
```

```
void setup()
{
  //Initialize number of Mods on Arduino (Max.3)
  //Currently Board is set up for two Modules ONLY. If needed, change pins
before numMods
  number_of_modules = 1;
  initMods(number_of_modules);
  attachInterrupt(0, changeState, CHANGE);
}

void loop()
{

    startChargeMod(1);
    delay(chargeTime);
    stopChargeMod(1);
    delay(3000);
    releaseMod(1);
    delay(releaseTime);
    resetMod(1);
    delay(5000);


//need way to iterate through modules
/**
  for(int m=0; m<number_of_modules; m++){
    startChargeMod(m);
    delay(chargeTime);
    stopChargeMod(m);
    releaseMod(m);
    delay(releaseTime);
    resetMod(m);
    delay(1000);
    **/
/**
    if (modCharged[0] == false){
     startChargeMod(1);
    }

    else if (cycleCheckMod[0]+chargeTime >= currentTime){
      stopChargeMod(1);
    }

   //make this an interrupt & with a little luck it will work!!!

   // else if(digitalRead(26) == HIGH){
    //buttonPressed[0]=buttonPressed[0]+1;
    //}

    else if(buttonPressed[0] == HIGH && modCharged[0] == true){
      releaseMod(1);
      delay(2000);
      resetMod(1);
    }

   // else if(buttonPressed[0] > 1){
    //  resetMod(1);
```

```
    //}
   /**
    else if (digitalRead(26) == HIGH){
      releaseMod(1);
    }
    **/
  //}

}
```

Bibliography

[1] Harvard University. (2013) Whitesides Research Group. [Online]. http://gmwgroup.harvard.edu/research/index.php?page=23

[2] Marko B. Popovic, "Wearable Soft Robotic Device for Post-Stroke Shoulder Rehabilitation: Identifying Misalignments," in *IEEE/RSJ International Conference on Intelligent Robots and Systems*, Vilamoura, Algarve, Portugal, 2012.

[3] Michael Helms, Swaroop S. Vattam, and Ashok K. Goel, "Biologically Inspired Design: Process and Products," *Design Studies*, vol. 30, no. 5, pp. 606-622, September 2009.

[4] Carlos A.M. Versos and Denis A. Coelho, "Biologically Inspired Design: Methods and Validation," in *Industrial Design - New Frontiers*, Denis Coelho, Ed.: Intech, 2011, ch. 6, pp. 102-120.

[5] Scott Trappe et al., "Single Muscle Fibre Contractile Properties in Young and Old Men and Women," *Journal of Physiology*, vol. 550, no. 1, pp. 47-58, July 2003.

[6] Christopher J. Berthelette, Germano S. Iannacchione, Stephan K. Koehler, and Marko B. Popovic, "The One-To-Many Concept and Soft Robotics ExoMusculature," March 2012.

[7] Christopher J. Berthelette et al. (2012, June) Popovic Labs. [Online]. http://users.wpi.edu/~mpopovic/media/pubs/NASAposterUpdated.pdf

[8] Carl T. Ulrich and Steven D. Eppinger, "Design For Manufacturing," in *Product Design and Development*.: McGraw Hill, 2008, ch. 11, pp. 209-244.

[9] Geoffrey Boothroyd, Peter Dewhurst, and Winston Knight, "Product Design for Manual Assembly," in *Product Design for Manufacture and Assembly*. New York, United States: CRC Press, 2001, ch. 3.

[10] "Minnesota Chiropractors Encourage Backpack Safety," *PR Newswire*, August 2012.

[11] Claire C Gordon et al., "1988 Anthropometric Survey of U.S. Army Personnel: Methods and Summary Statistics," U.S. Army Research, Development and Engineering Center, Natick, MA, Technical Report 1988.

[12] Yoseph Bar-Cohen, "Biomimetics—Using Nature to Inspire Human Innovation," *Bioinspiration & Biomimetics*, vol. 1, no. 1, pp. P1-P12, March 2006.