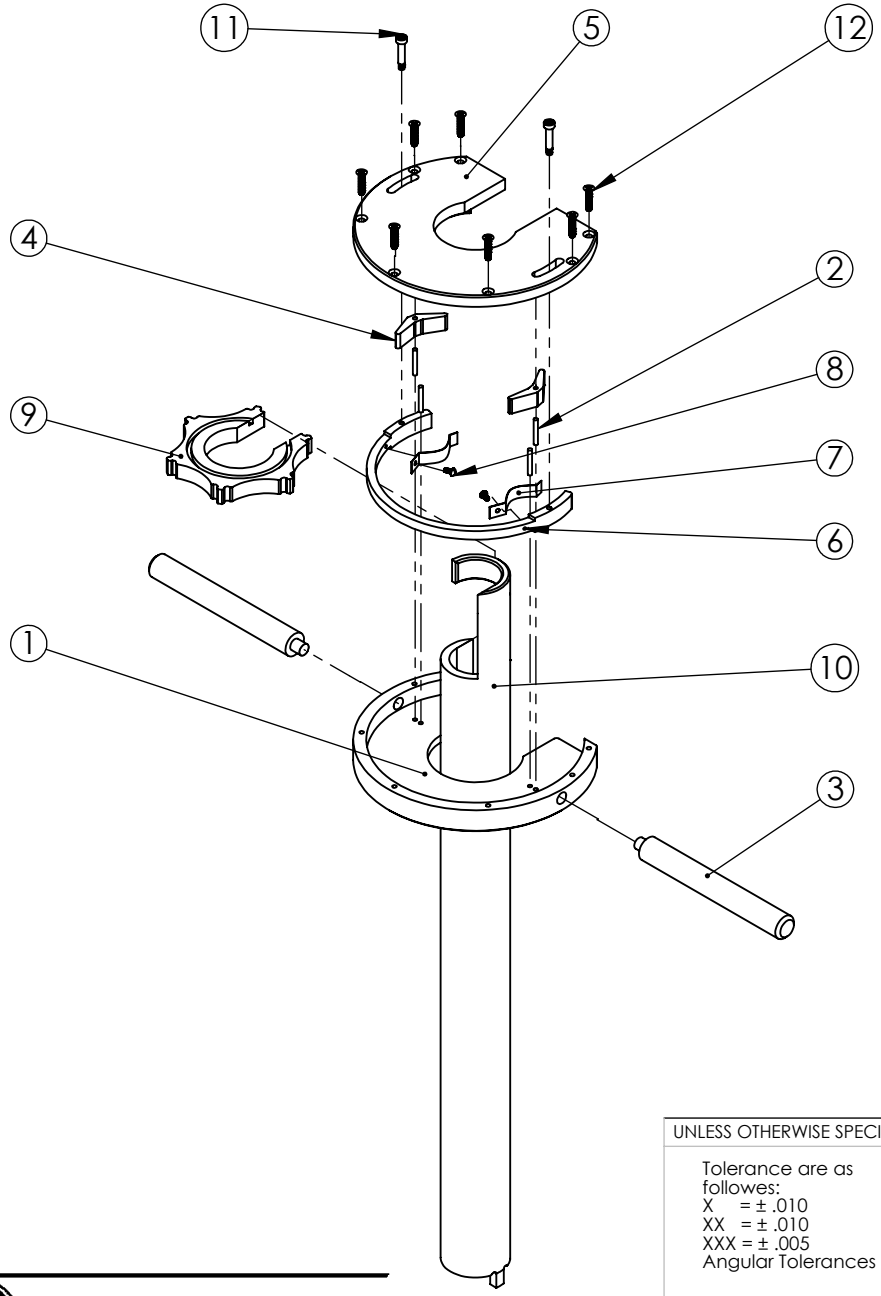

Bill Of Materials		
ITEM NO.	PART NUMBER	QTY.
1	Ratchet Assembly Housing	1
2	Pin	4
3	Handle	2
4	Ratchet flipper	2
5	Ratchet assembly housing Top3	1
6	LeafSpringSlider	1
7	leaf spring	2
8	90276A124	2
9	Gear 2	1
10	Shaft	1
11	94045A207	2
12	90471A273	7

UNLESS OTHERWISE SPECIFIED:

Tolerance are as followes:
X = ± .010
XX = ± .010
XXX = ± .005
Angular Tolerances ±1°

INTERPRET GEOMETRIC TOLERANCING PER:

MATERIAL

FINISH

DO NOT SCALE DRAWING

	NAME	DATE
DRAWN	MBR	4/21/09
CHECKED	GDL	4/21/09
ENG APPR.		
MFG APPR.		
Q.A.		

PART NUMBER:

Worcester Polytechnic Institute

TITLE:

Exploded Assembly View

SIZE **A** | DWG. NO. 1 | REV 0

SCALE: 1:5.5 | WEIGHT: | SHEET 1 OF 1

5 4 3 2 1

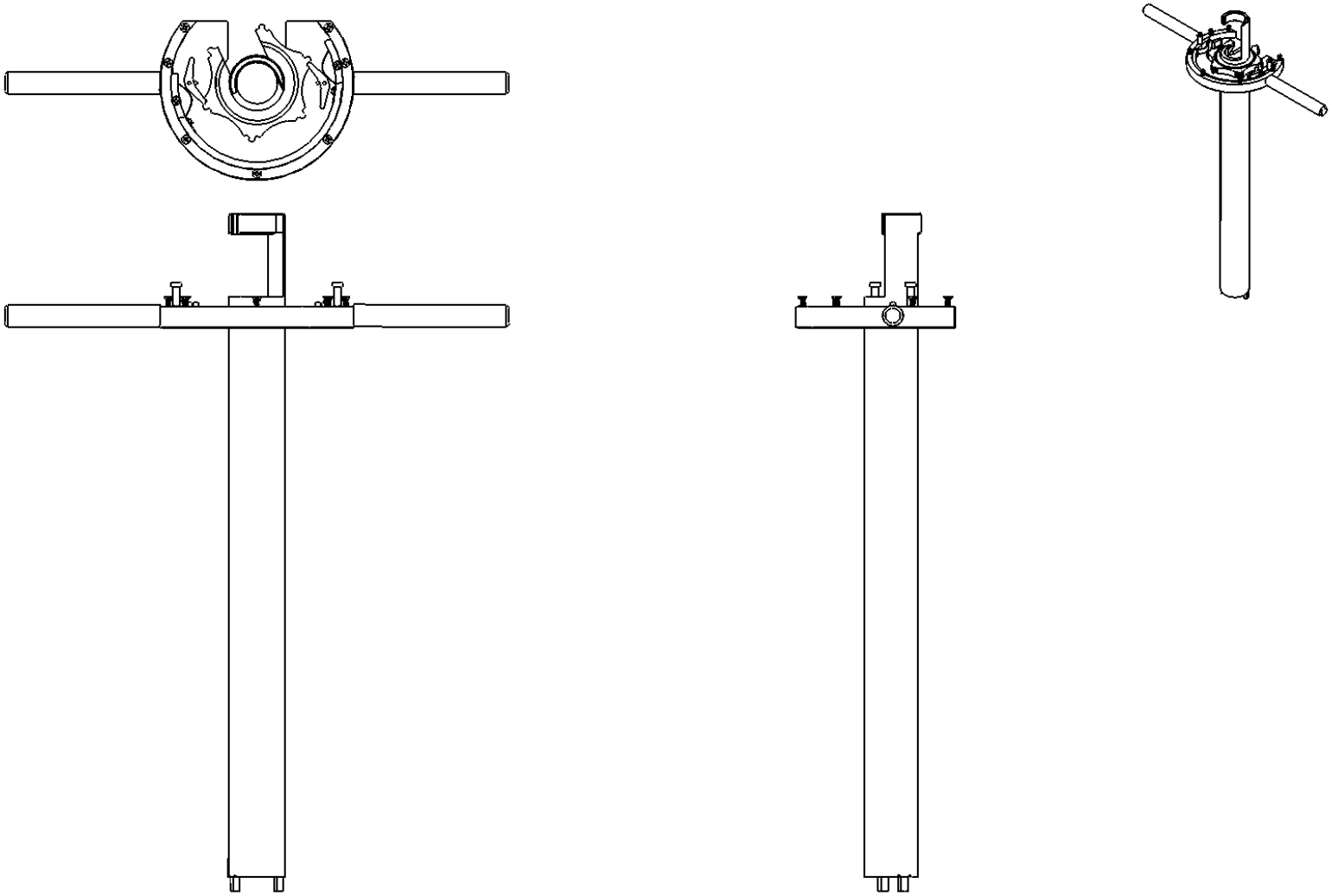

UNLESS OTHERWISE SPECIFIED:		NAME	DATE	Worcester Polytechnic Institute
Tolerance are as followes: X = ± .010 XX = ± .010 XXX = ± .005 Angular Tolerances ±1°	DRAWN	MBR	4/21/09	TITLE:
	CHECKED	GDL	4/21/09	Entire Assembly View
	ENG APPR.			
	MFG APPR.			
INTERPRET GEOMETRIC TOLERANCING PER:	Q.A.			
MATERIAL	PART NUMBER:			SIZE A · DWG. NO. 2A · REV 0
FINISH				
DO NOT SCALE DRAWING				SCALE: 1:6 · WEIGHT: · SHEET 1 OF 3

5 4 3 2 1

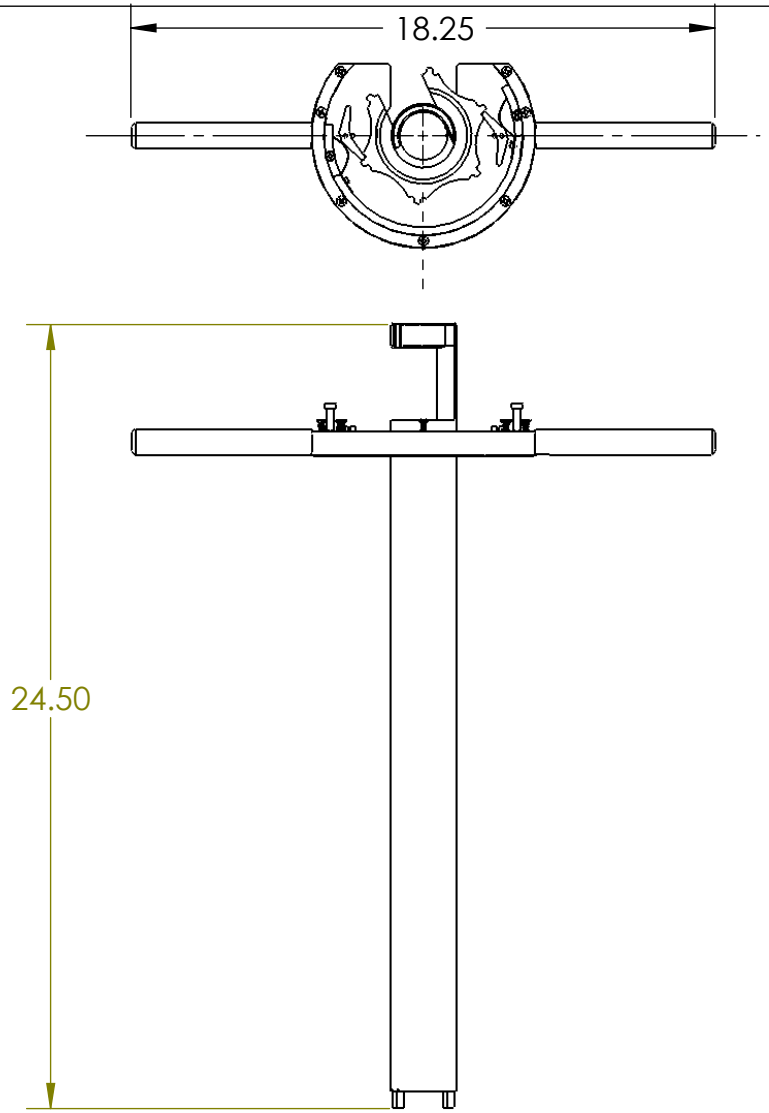

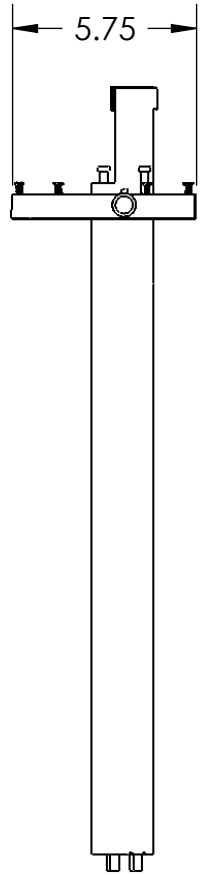

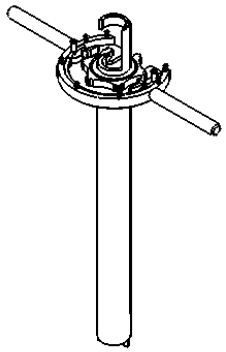

UNLESS OTHERWISE SPECIFIED:		NAME	DATE
Tolerance are as followes: X = ± .010 XX = ± .010 XXX = ± .005 Angular Tolerances ±1°	DRAWN	MBR	4/21/09
	CHECKED	MBR	4/21/09
	ENG APPR.		
	MFG APPR.		
INTERPRET GEOMETRIC TOLERANCING PER:	Q.A.		
MATERIAL	PART NUMBER:		
FINISH			
DO NOT SCALE DRAWING			

Worcester Polytechnic Institute

TITLE:

Entire Assembly View

SIZE	DWG. NO.	REV
A	2B	0

SCALE: 1:6 | WEIGHT: | SHEET 2 OF 3

5 4 3 2 1

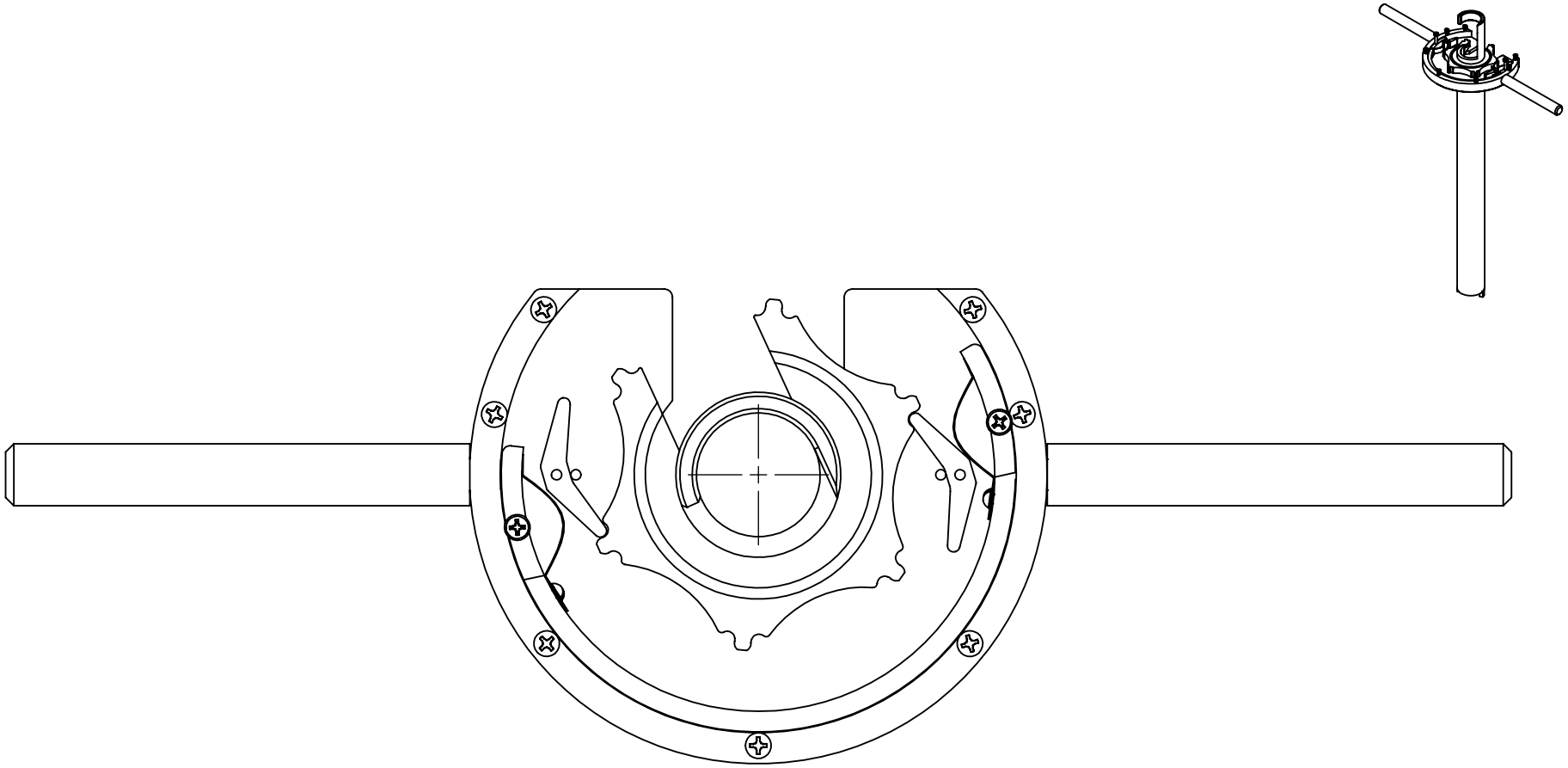

UNLESS OTHERWISE SPECIFIED:		NAME	DATE	Worcester Polytechnic Institute
Tolerance are as followes: X = ± .010 XX = ± .010 XXX = ± .005 Angular Tolerances ±1°	DRAWN	MBR	4/21/09	TITLE:
	CHECKED	GDL	4/22/09	Assembly Internals
	ENG APPR.			
	MFG APPR.			
INTERPRET GEOMETRIC TOLERANCING PER:	Q.A.			
MATERIAL	PART NUMBER:			SIZE A / DWG. NO. 2C / REV 0
FINISH				
DO NOT SCALE DRAWING				SCALE: 1:2 / WEIGHT: / SHEET 3 OF 3

5 4 3 2 1

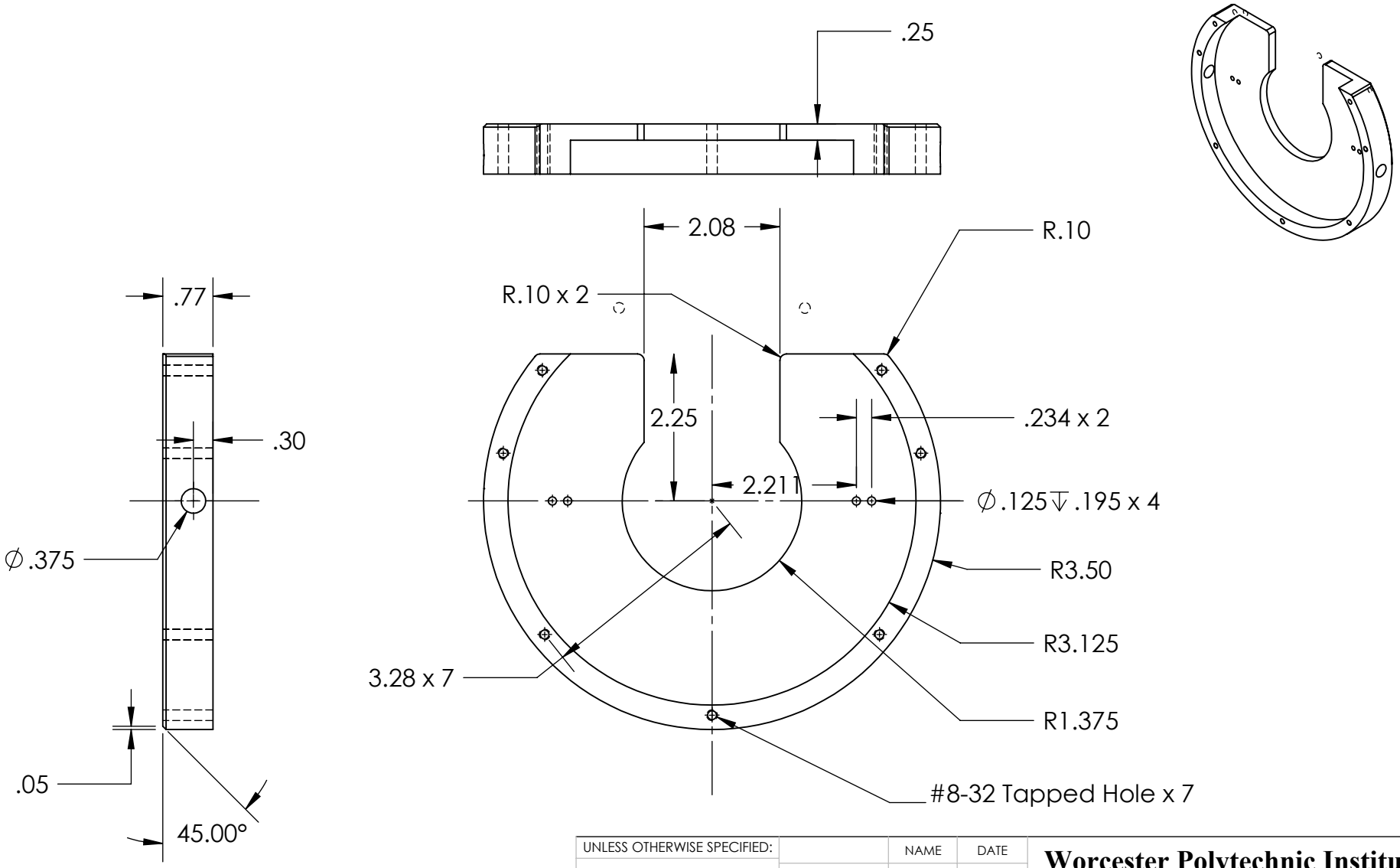

UNLESS OTHERWISE SPECIFIED:		NAME	DATE	Worcester Polytechnic Institute
Tolerance are as followes: X = ± .010 XX = ± .010 XXX = ± .005 Angular Tolerances ±1°	DRAWN	MBR	4/17/09	TITLE: Ratchet Assembly Housing
	CHECKED	GDL	4/21/09	
	ENG APPR.			
	MFG APPR.			
INTERPRET GEOMETRIC TOLERANCING PER:	Q.A.			
MATERIAL	PART NUMBER: 1			SIZE A / DWG. NO. 3A / REV 0
FINISH				
DO NOT SCALE DRAWING				SCALE: 1:2.5 / WEIGHT: / SHEET 1 OF 2

5 4 3 2 1

SECTION F-F
SCALE 1 : 2

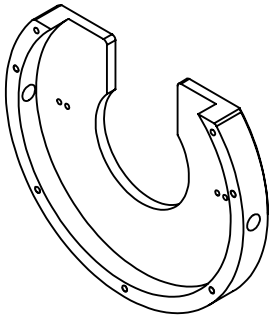

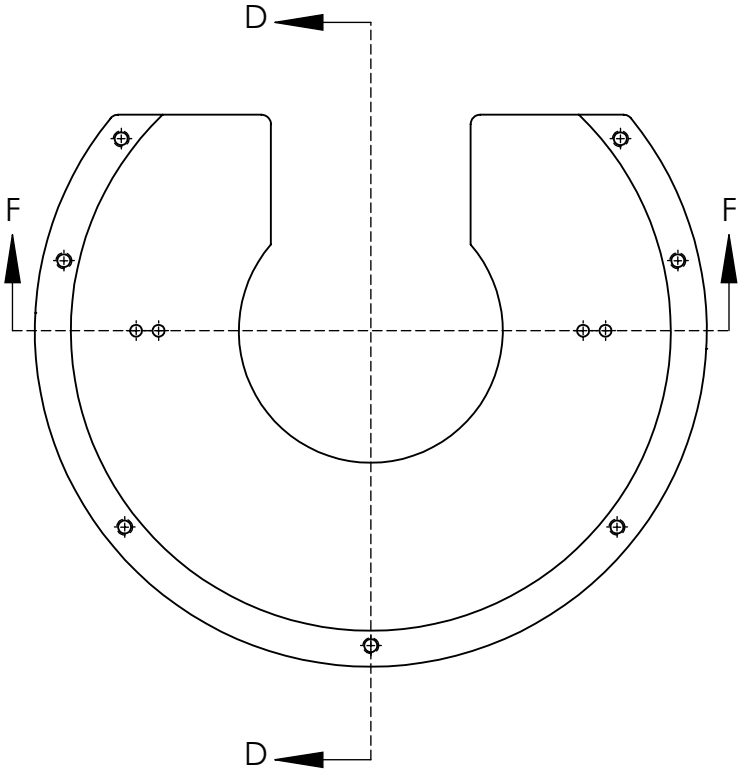

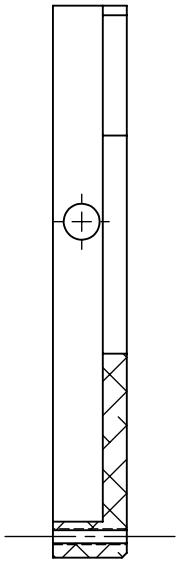

SECTION D-D
SCALE 1 : 2

UNLESS OTHERWISE SPECIFIED:		NAME	DATE	Worcester Polytechnic Institute
Tolerance are as followes: X = ± .010 XX = ± .010 XXX = ± .005 Angular Tolerances ±1°	DRAWN	MBR	4/18/09	TITLE:
	CHECKED	GDL	4/21/09	Ratchet Assembly Housing Section View
	ENG APPR.			
	MFG APPR.			
INTERPRET GEOMETRIC TOLERANCING PER:	Q.A.			
MATERIAL	PART NUMBER:			SIZE A / DWG. NO. 3B / REV 0
FINISH	1			
DO NOT SCALE DRAWING				SCALE: 1:2 / WEIGHT: / SHEET 2 OF 2

5 4 3 2 1

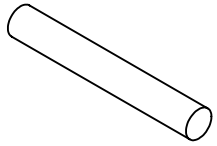

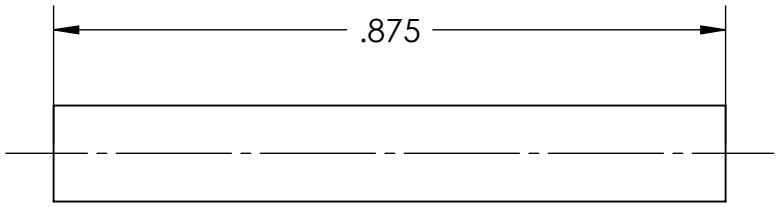

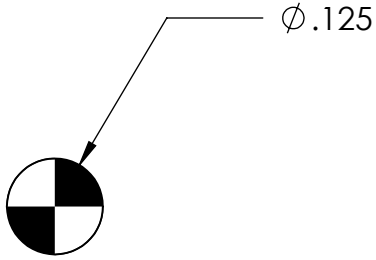

UNLESS OTHERWISE SPECIFIED:		NAME	DATE	Worcester Polytechnic Institute
Tolerance are as followes: X = ± .010 XX = ± .010 XXX = ± .005 Angular Tolerances ±1°	DRAWN	MBR	4/16/09	TITLE:
	CHECKED	GDL	4/21/09	Pin
	ENG APPR.			
	MFG APPR.			
INTERPRET GEOMETRIC TOLERANCING PER:	Q.A.			
MATERIAL	PART NUMBER:			SIZE A / DWG. NO. 4 / REV 0
FINISH	2			
DO NOT SCALE DRAWING				SCALE: 4:1 / WEIGHT: / SHEET 1 OF 1

5 4 3 2 1

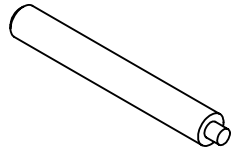

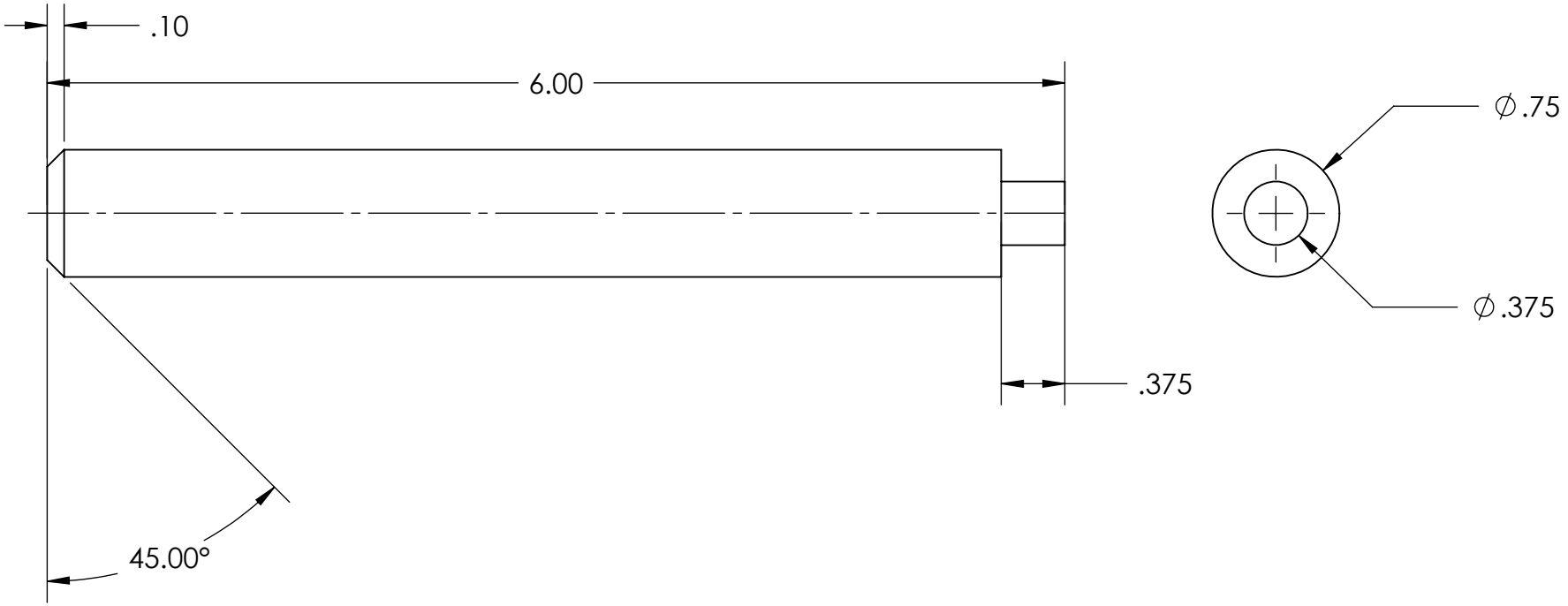

UNLESS OTHERWISE SPECIFIED:		NAME	DATE	Worcester Polytechnic Institute
Tolerance are as followes: X = ± .010 XX = ± .010 XXX = ± .005 Angular Tolerances ±1°	DRAWN	MBR	4/16/09	TITLE:
	CHECKED	GDL	4/21/09	Handle
	ENG APPR.			
	MFG APPR.			
INTERPRET GEOMETRIC TOLERANCING PER:	Q.A.			
MATERIAL	PART NUMBER:			SIZE A / DWG. NO. 5 / REV 0
FINISH	3			
DO NOT SCALE DRAWING				SCALE: 1:1 / WEIGHT: / SHEET 1 OF 1

5 4 3 2 1

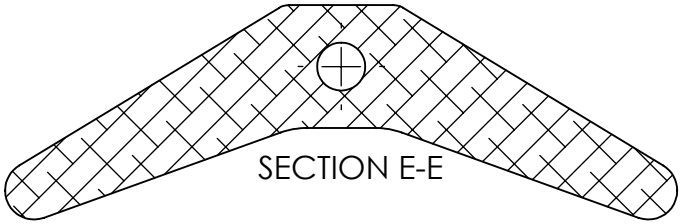

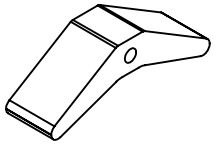

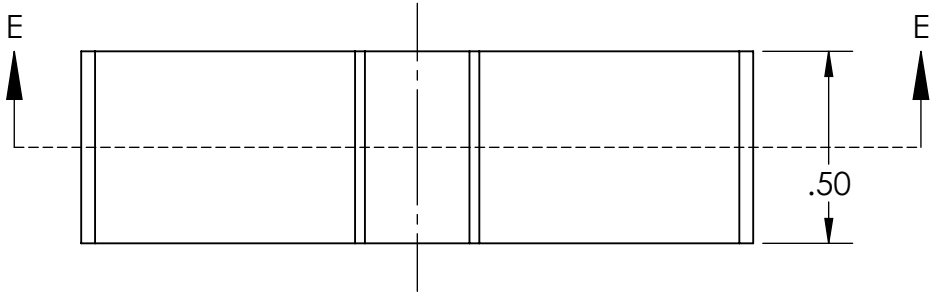

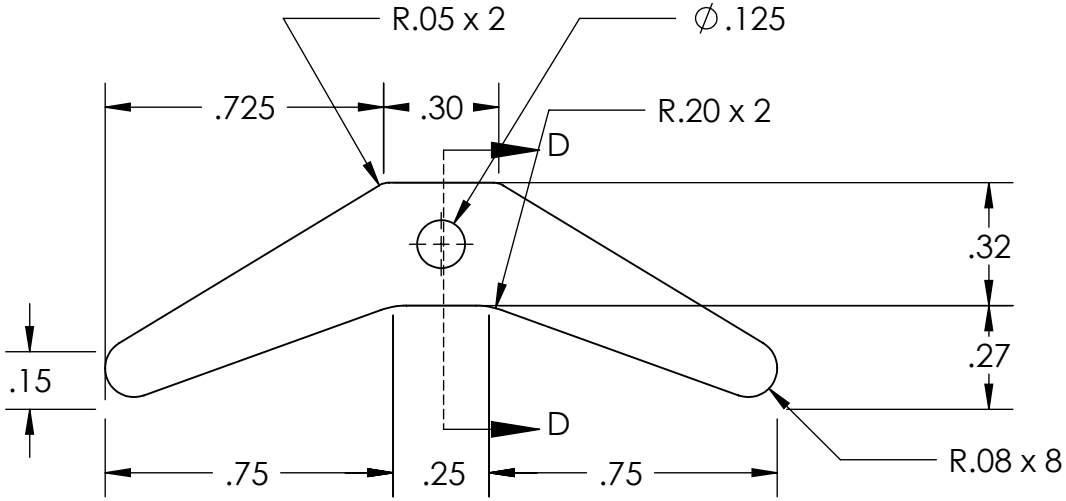

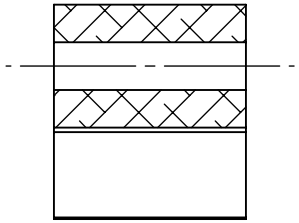

SECTION D-D

UNLESS OTHERWISE SPECIFIED:		NAME	DATE
Tolerance are as followes: X = ± .010 XX = ± .010 XXX = ± .005 Angular Tolerances ±1°	DRAWN	MBR	4/17/09
	CHECKED	GDL	4/21/09
	ENG APPR.		
	MFG APPR.		
INTERPRET GEOMETRIC TOLERANCING PER:	Q.A.		
MATERIAL	PART NUMBER:		
FINISH	4		
DO NOT SCALE DRAWING			

Worcester Polytechnic Institute

TITLE:

Ratchet Flipper

SIZE	DWG. NO.	REV
A	6	0

SCALE: 2:1 | WEIGHT: | SHEET 1 OF 1

5 4 3 2 1

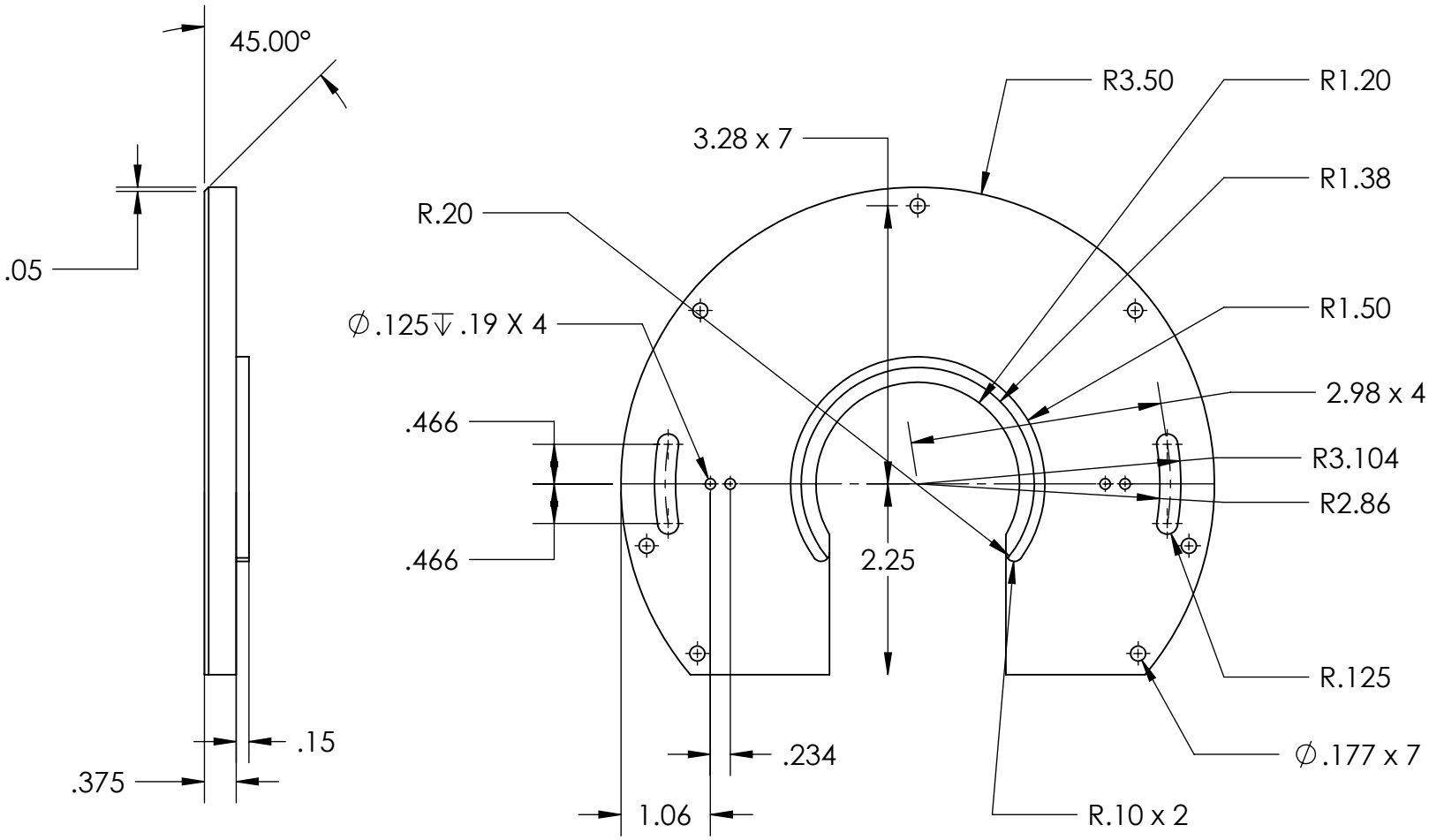

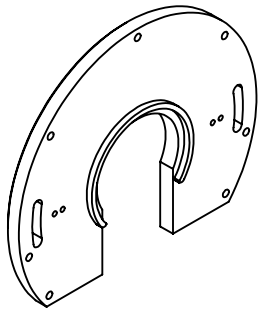

UNLESS OTHERWISE SPECIFIED:		NAME	DATE	Worcester Polytechnic Institute
Tolerance are as followes: X = ± .010 XX = ± .010 XXX = ± .005 Angular Tolerances ±1°	DRAWN	MBR	4/18/09	TITLE: Ratchet Assembly Housing Top
	CHECKED	GDL	4/21/09	
	ENG APPR.			
	MFG APPR.			
INTERPRET GEOMETRIC TOLERANCING PER:	Q.A.			
MATERIAL	PART NUMBER: 5			SIZE A · DWG. NO. 7A · REV 0
FINISH				
DO NOT SCALE DRAWING				SCALE: 1:2 · WEIGHT: · SHEET 1 OF 2

5 4 3 2 1

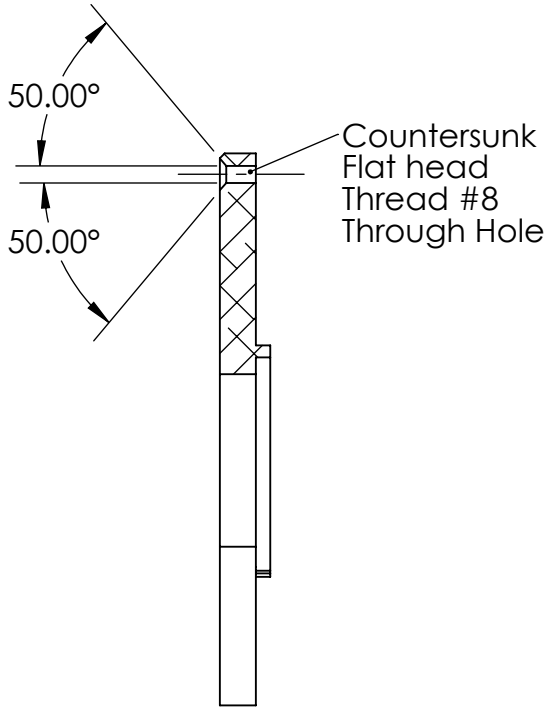

SECTION D-D

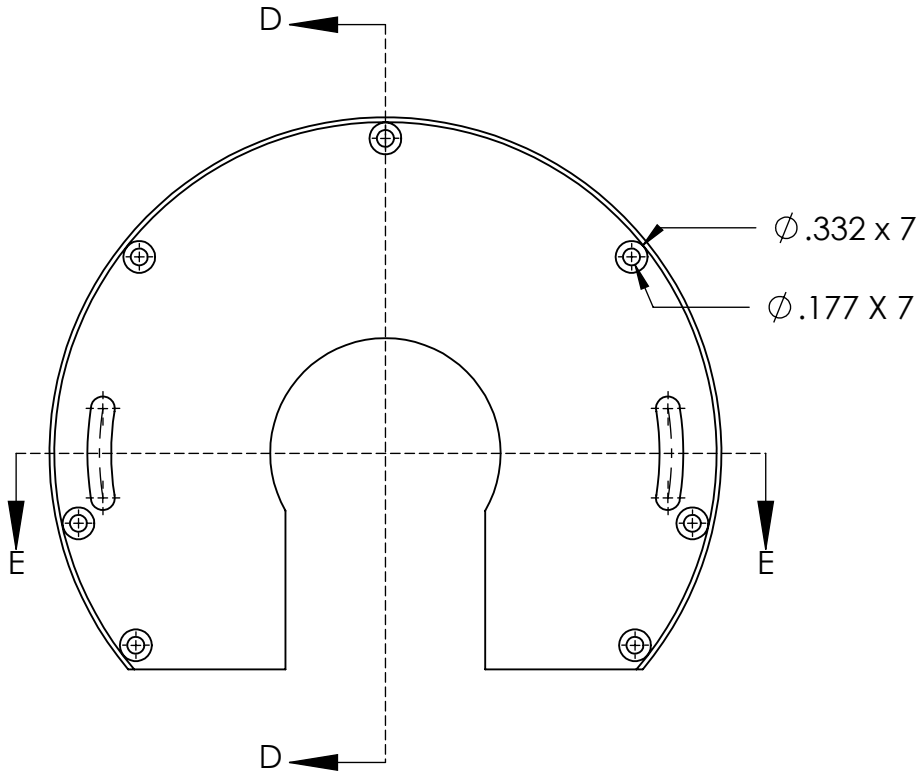

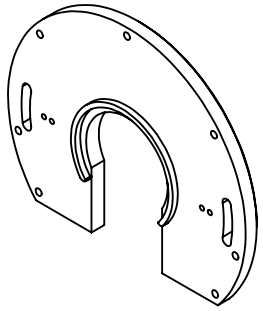

SECTION E-E

UNLESS OTHERWISE SPECIFIED:		NAME	DATE	Worcester Polytechnic Institute
Tolerance are as followes: X = ± .010 XX = ± .010 XXX = ± .005 Angular Tolerances ±1°	DRAWN	MBR	4/18/09	TITLE:
	CHECKED	GDL	4/21/09	Ratchet Assembly Housing Top TOP
	ENG APPR.			
	MFG APPR.			
INTERPRET GEOMETRIC TOLERANCING PER:	Q.A.			
MATERIAL	PART NUMBER:			SIZE A · DWG. NO. 7B · REV 0
FINISH	5			
DO NOT SCALE DRAWING				SCALE: 1:2 · WEIGHT: · SHEET 2 OF 2

5 4 3 2 1

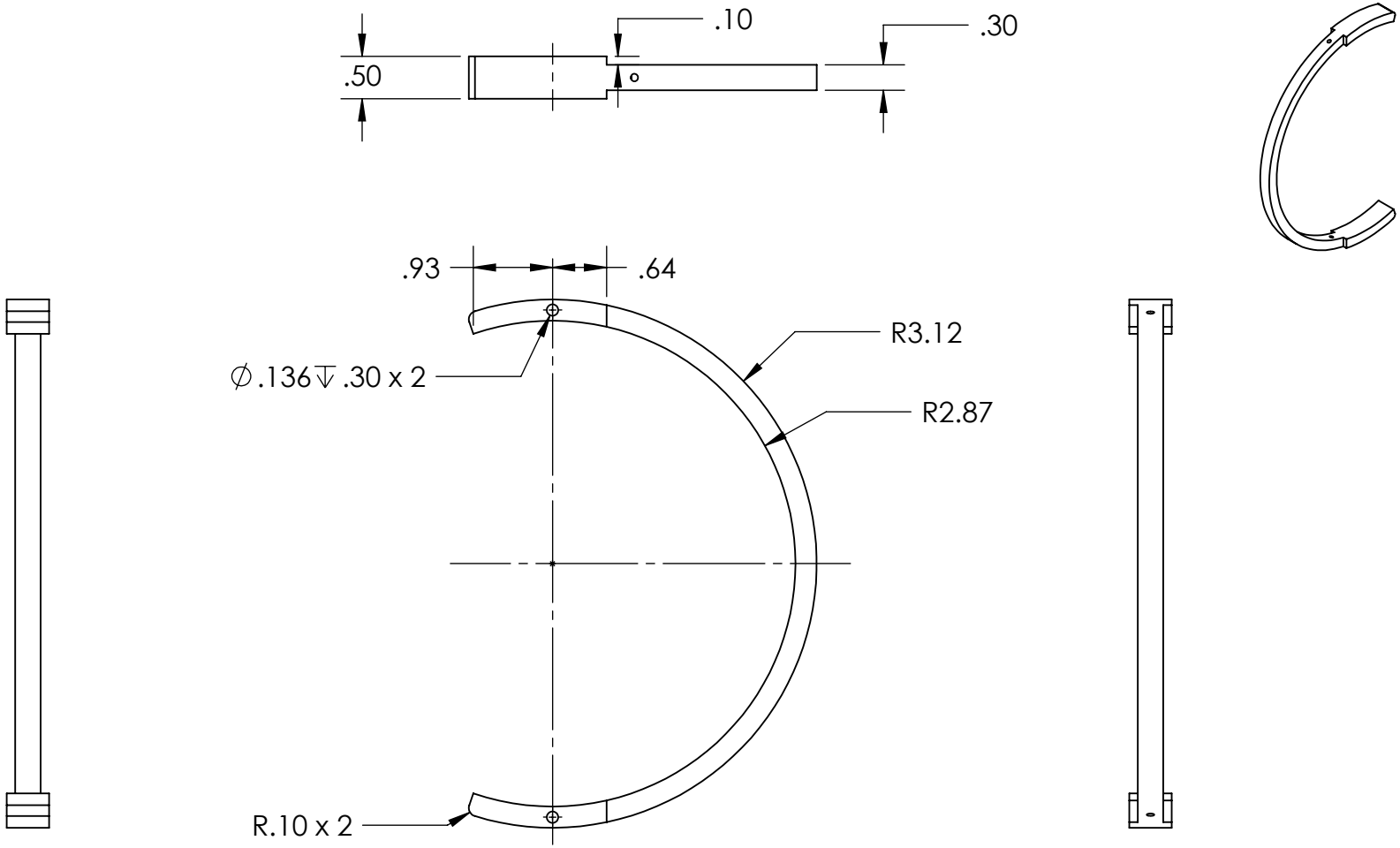

UNLESS OTHERWISE SPECIFIED:		NAME	DATE	Worcester Polytechnic Institute
Tolerance are as followes: X = ± .010 XX = ± .010 XXX = ± .005 Angular Tolerances ±1°	DRAWN	MBR	4/20/09	TITLE:
	CHECKED	GDL	4/22/09	Leaf Spring Slider
	ENG APPR.			
	MFG APPR.			
INTERPRET GEOMETRIC TOLERANCING PER:	Q.A.			
MATERIAL	PART NUMBER:			SIZE A · DWG. NO. 8A · REV 0
FINISH	6			
DO NOT SCALE DRAWING				SCALE: 1:2 · WEIGHT: · SHEET 1 OF 2

5 4 3 2 1

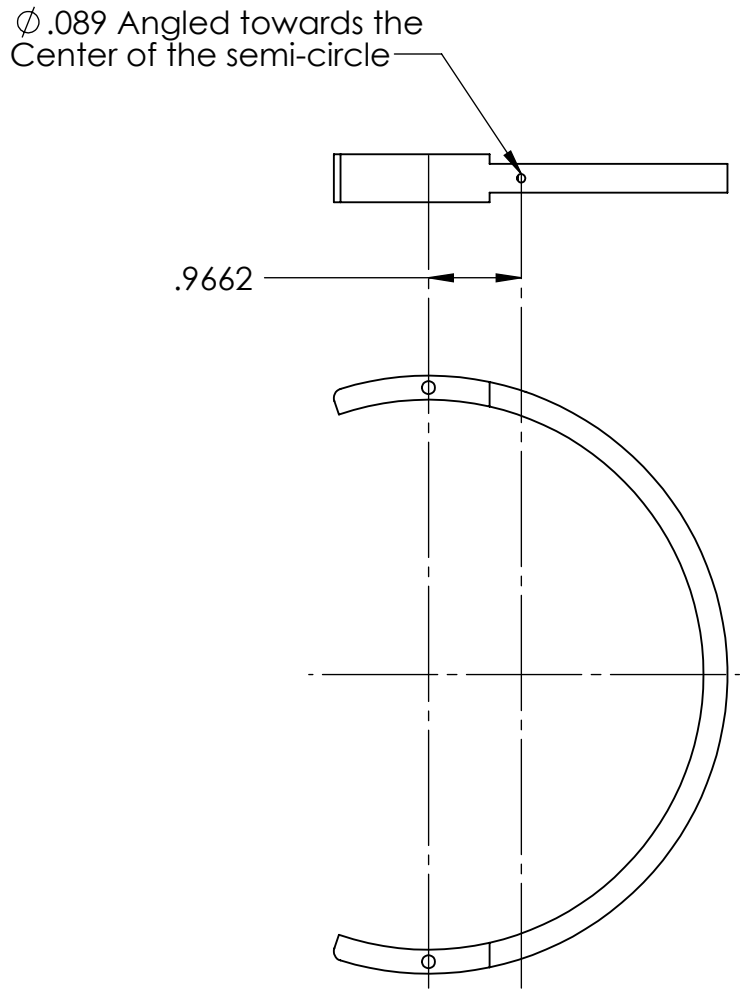

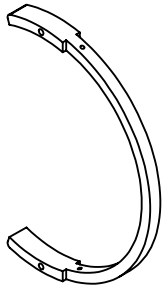

UNLESS OTHERWISE SPECIFIED:		NAME	DATE	Worcester Polytechnic Institute
Tolerance are as followes: X = ± .010 XX = ± .010 XXX = ± .005 Angular Tolerances ±1°	DRAWN	MBR	4/20/09	TITLE:
	CHECKED	GDL	4/22/09	Leaf Spring Slider
	ENG APPR.			
	MFG APPR.			
INTERPRET GEOMETRIC TOLERANCING PER:	Q.A.			
MATERIAL	PART NUMBER:			SIZE A · DWG. NO. 8B · REV 0
FINISH	6			
DO NOT SCALE DRAWING				SCALE: 1:2 · WEIGHT: · SHEET 2 OF 2

5 4 3 2 1

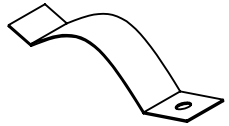

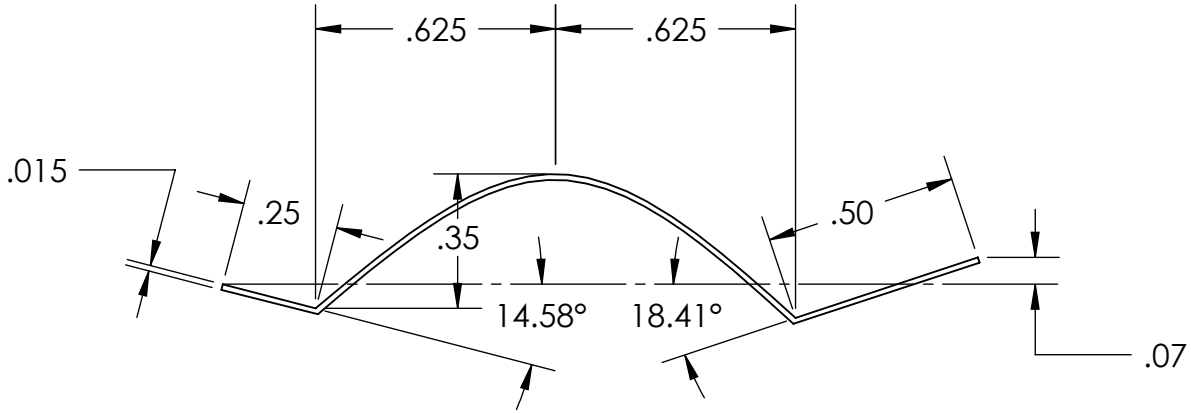

UNLESS OTHERWISE SPECIFIED:		NAME	DATE	Worcester Polytechnic Institute
Tolerance are as followes: X = ± .010 XX = ± .010 XXX = ± .005 Angular Tolerances ±1°	DRAWN	MBR	4/20/09	TITLE:
	CHECKED	GDL	4/22/09	Leaf Spring
	ENG APPR.			
	MFG APPR.			
INTERPRET GEOMETRIC TOLERANCING PER:	Q.A.			
MATERIAL	PART NUMBER:			SIZE A · DWG. NO. 9A · REV 0
FINISH	7			
DO NOT SCALE DRAWING				SCALE: 2:1 · WEIGHT: · SHEET 1 OF 2

5 4 3 2 1

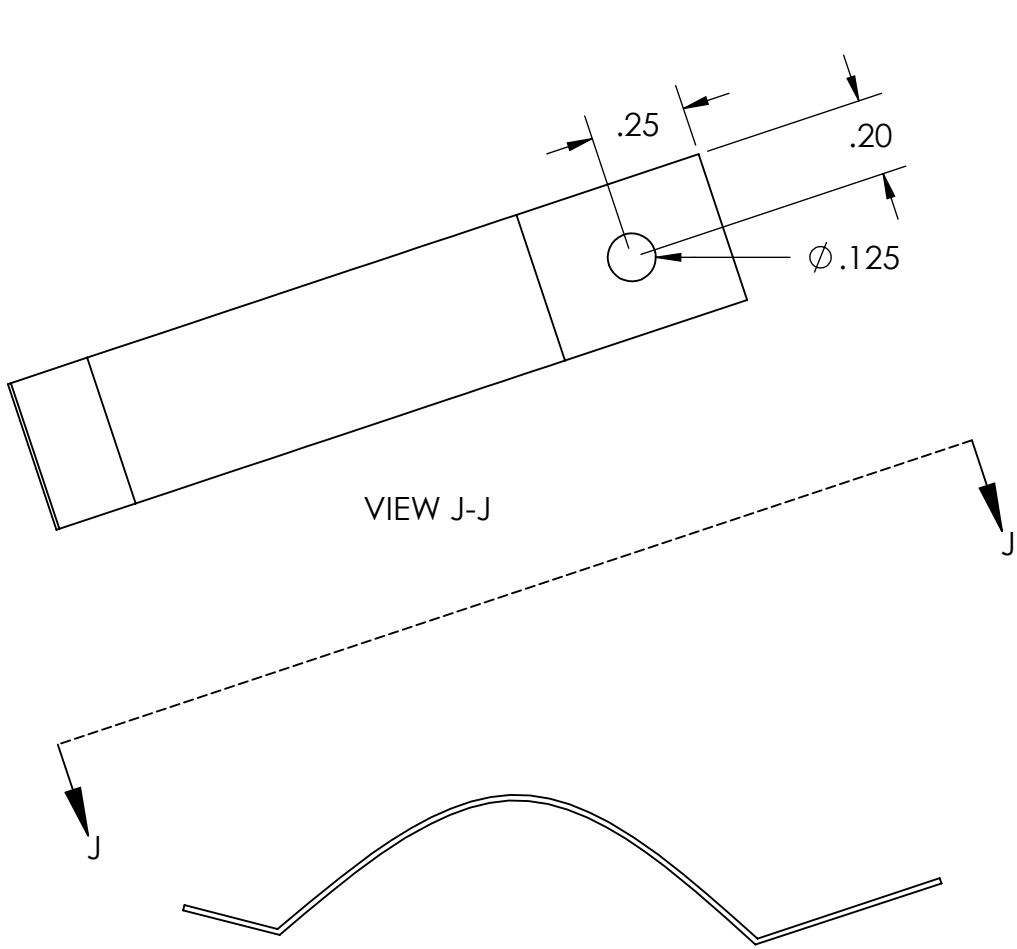

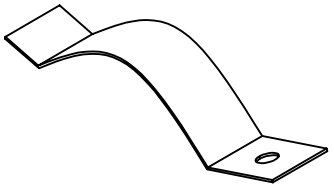

UNLESS OTHERWISE SPECIFIED:		NAME	DATE	Worcester Polytechnic Institute
Tolerance are as followes: X = ± .010 XX = ± .010 XXX = ± .005 Angular Tolerances ±1°	DRAWN	MBR	4/22/09	TITLE:
	CHECKED	GDL	4/22/09	Leaf Spring Auxillary View
	ENG APPR.			
	MFG APPR.			
INTERPRET GEOMETRIC TOLERANCING PER:	Q.A.			
MATERIAL	PART NUMBER:			SIZE A / DWG. NO. 9B / REV 0
FINISH	7			
DO NOT SCALE DRAWING				SCALE: 2:1 / WEIGHT: / SHEET 2 OF 2

5 4 3 2 1

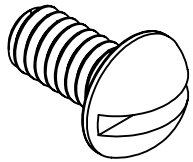

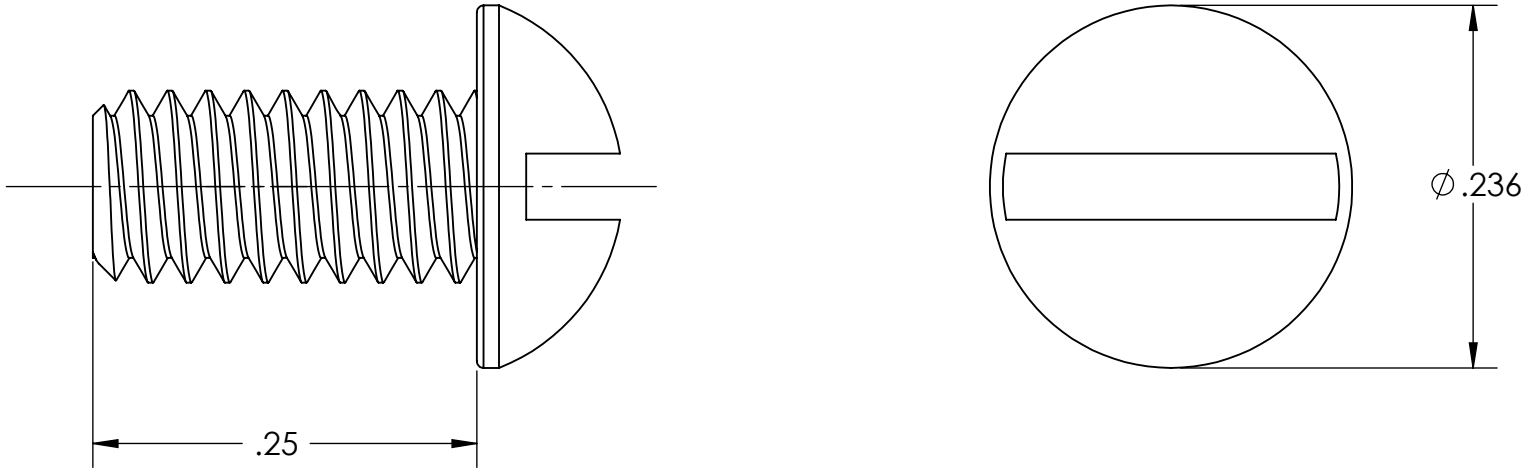

Note: .25in long
Button head Screw
Thread size #4-40
Phillips head or flat
head acceptable

UNLESS OTHERWISE SPECIFIED:		NAME	DATE	Worcester Polytechnic Institute
Tolerance are as followes: X = ± .010 XX = ± .010 XXX = ± .005 Angular Tolerances ±1°	DRAWN	MBR	4/21/09	TITLE: Leaf Spring Screw
	CHECKED	GDL	4/22/09	
	ENG APPR.			
	MFG APPR.			
INTERPRET GEOMETRIC TOLERANCING PER:	Q.A.			
MATERIAL	PART NUMBER: 8			SIZE A / DWG. NO. 10 / REV 0
FINISH				
DO NOT SCALE DRAWING				SCALE: 8:1 / WEIGHT: / SHEET 1 OF 1

5 4 3 2 1

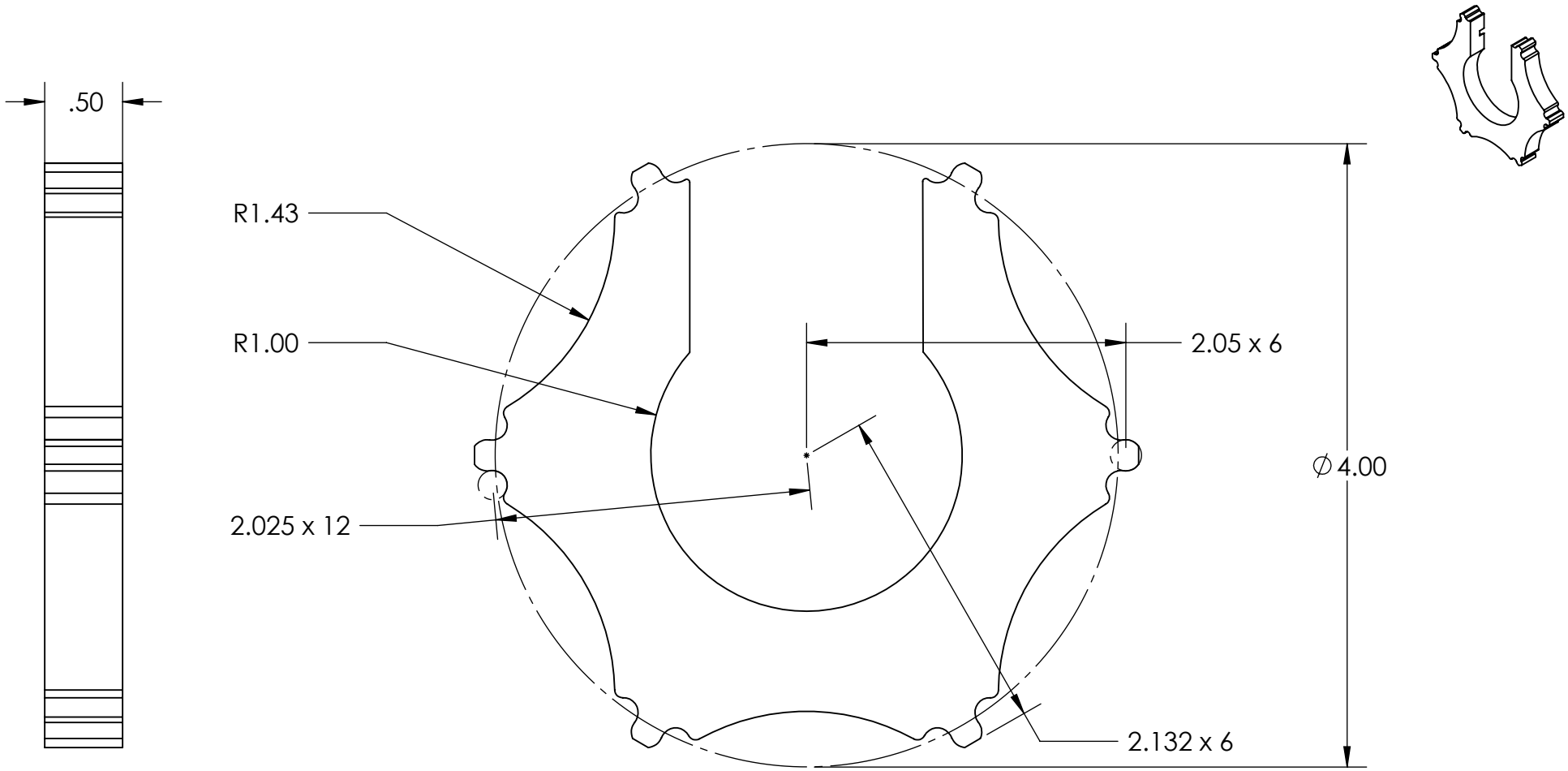

UNLESS OTHERWISE SPECIFIED:		NAME	DATE	Worcester Polytechnic Institute
Tolerance are as followes: X = ± .020 XX = ± .010 XXX = ± .005 Angular Tolerances ±1°	DRAWN	MBR	4/17/09	TITLE:
	CHECKED	GDL	4/22/09	Gear
	ENG APPR.			
	MFG APPR.			
INTERPRET GEOMETRIC TOLERANCING PER:	Q.A.			
MATERIAL	PART NUMBER:			SIZE A / DWG. NO. 11A / REV 0
FINISH	9			
DO NOT SCALE DRAWING				SCALE: 1:1 / WEIGHT: / SHEET 1 OF 3

5 4 3 2 1

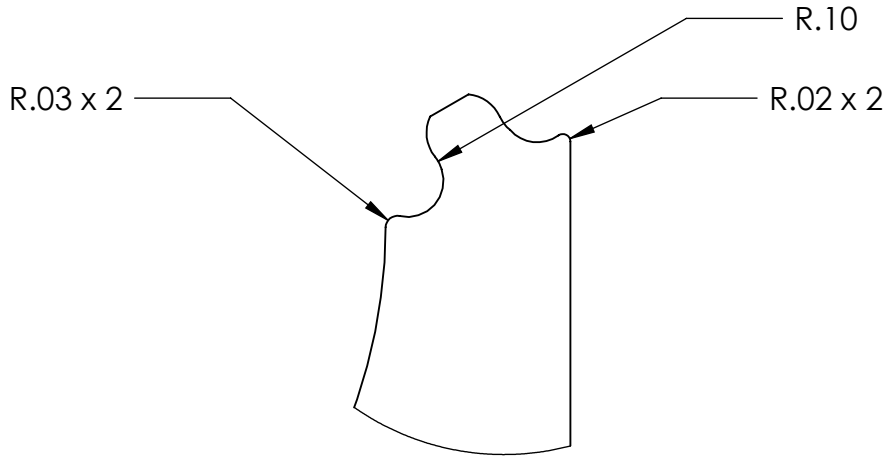

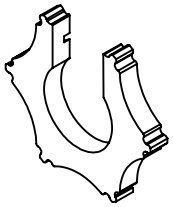

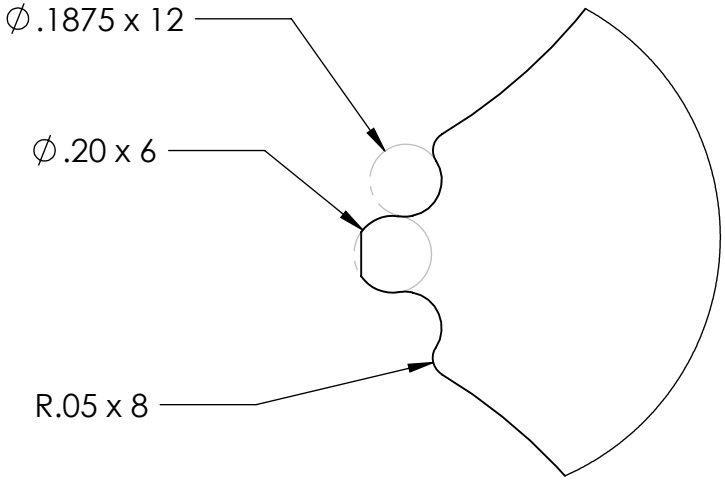

DETAIL E
SCALE 2 : 1

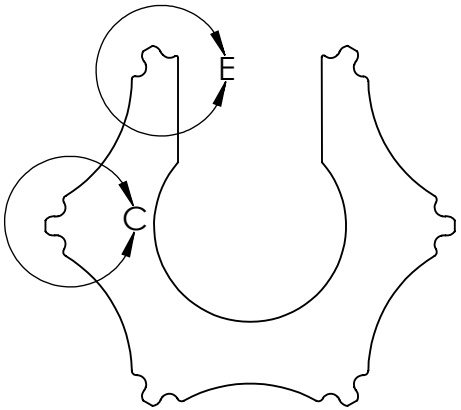

DETAIL C
SCALE 2 : 1

UNLESS OTHERWISE SPECIFIED:		NAME	DATE	Worcester Polytechnic Institute
Tolerance are as followes: X = ± .010 XX = ± .010 XXX = ± .005 Angular Tolerances ±1°	DRAWN	MBR	4/20/09	TITLE: Gear Tooth Detail Drawing
	CHECKED	GDL	4/22/09	
	ENG APPR.			
	MFG APPR.			
INTERPRET GEOMETRIC TOLERANCING PER:	Q.A.			
MATERIAL	PART NUMBER: 9			SIZE A / DWG. NO. 11B / REV 0
FINISH				
DO NOT SCALE DRAWING				SCALE: 2:1 / WEIGHT: / SHEET 2 OF 3

5 4 3 2 1

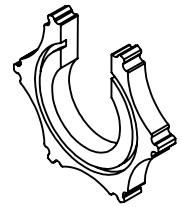

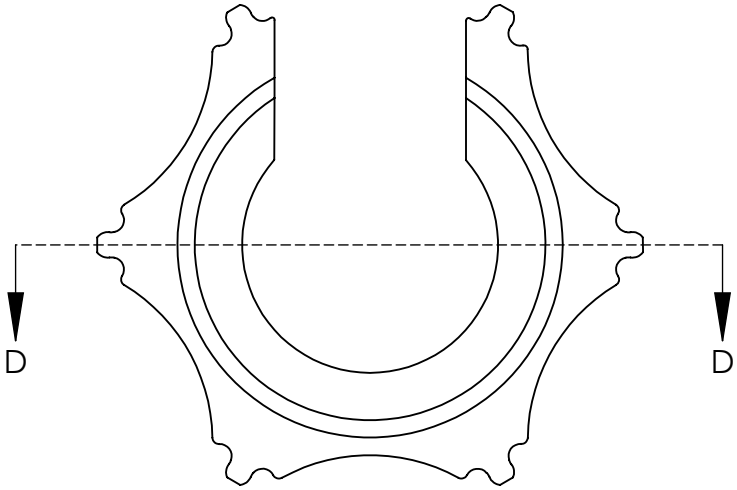

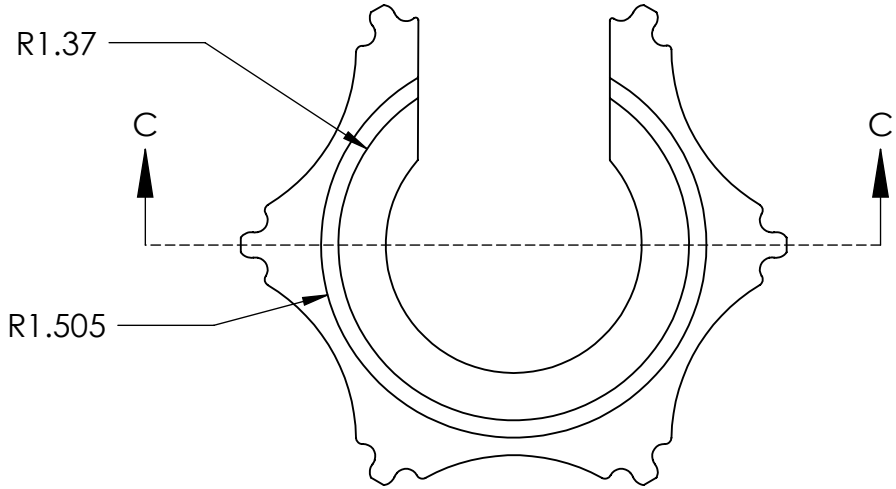

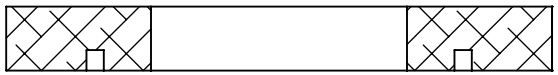

SECTION D-D
SCALE 1 : 1.5

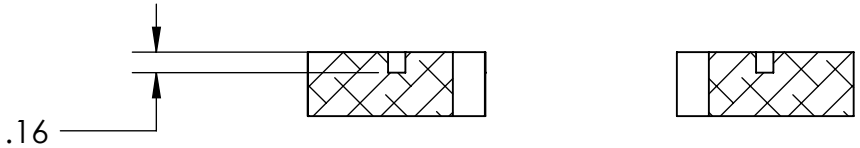

SECTION C-C
SCALE 1 : 1.5

UNLESS OTHERWISE SPECIFIED:		NAME	DATE	Worcester Polytechnic Institute
Tolerance are as followes: X = ± .010 XX = ± .010 XXX = ± .005 Angular Tolerances ±1°	DRAWN	MBR	4/20/09	TITLE:
	CHECKED	GDL	4/22/09	Gear Top
	ENG APPR.			
	MFG APPR.			
INTERPRET GEOMETRIC TOLERANCING PER:	Q.A.			
MATERIAL	PART NUMBER:			SIZE A / DWG. NO. 11C / REV 0
FINISH	9			
DO NOT SCALE DRAWING				SCALE: 1:1.5 / WEIGHT: / SHEET 3 OF 3

5 4 3 2 1

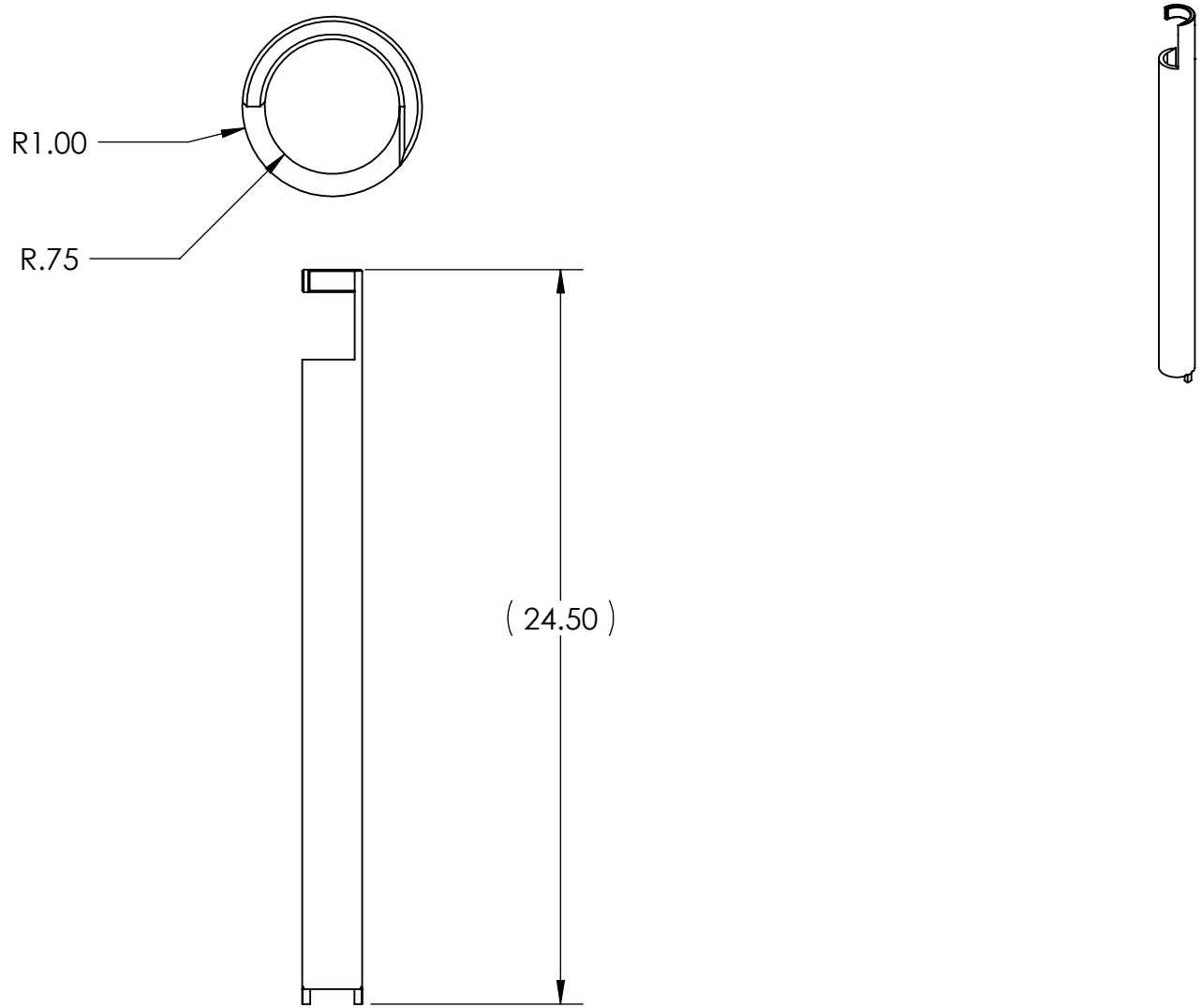

UNLESS OTHERWISE SPECIFIED:		NAME	DATE	Worcester Polytechnic Institute
Tolerance are as followes: X = ± .010 XX = ± .010 XXX = ± .005 Angular Tolerances ±1°	DRAWN	MBR	4/20/09	TITLE:
	CHECKED	GDL	4/22/09	Shaft
	ENG APPR.			
	MFG APPR.			
INTERPRET GEOMETRIC TOLERANCING PER:	Q.A.			
MATERIAL	PART NUMBER:			SIZE A · DWG. NO. 12A · REV 0
FINISH	10			
DO NOT SCALE DRAWING				SCALE: 1:6 · WEIGHT: · SHEET 1 OF 5

5 4 3 2 1

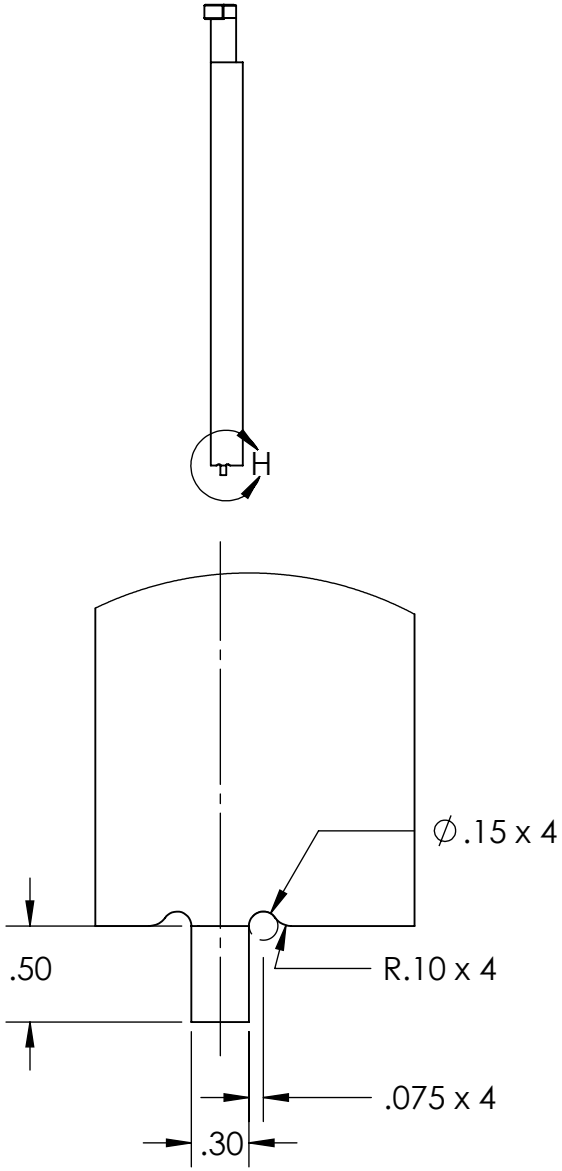

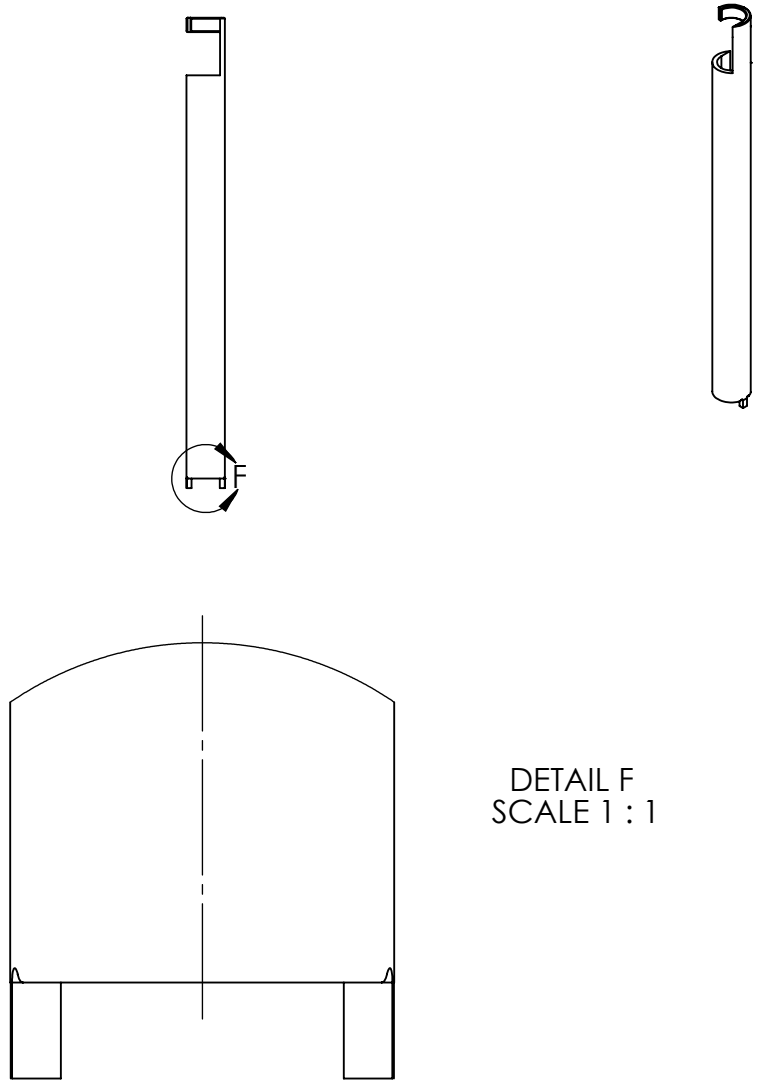

DETAIL F
SCALE 1 : 1

UNLESS OTHERWISE SPECIFIED:		NAME	DATE	Worcester Polytechnic Institute
Tolerance are as followes: X = ± .010 XX = ± .010 XXX = ± .005 Angular Tolerances ±1°	DRAWN	MBR	4/20/09	TITLE:
	CHECKED	GDL	4/22/09	Shaft: Dogs Detailed View
	ENG APPR.			
	MFG APPR.			
INTERPRET GEOMETRIC TOLERANCING PER:	Q.A.			
MATERIAL	PART NUMBER:			SIZE A · DWG. NO. 12B · REV 0
FINISH	10			
DO NOT SCALE DRAWING				SCALE: 1:1 · WEIGHT: · SHEET 2 OF 5

5 4 3 2 1

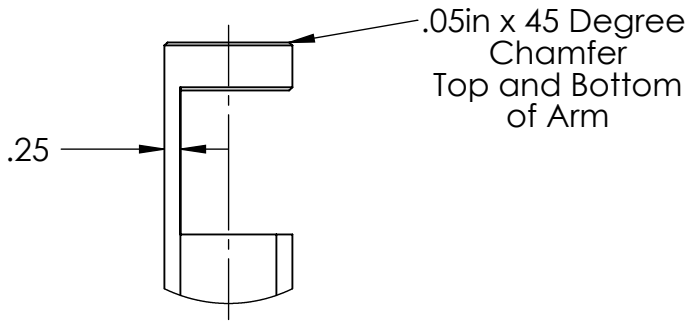

DETAIL K
SCALE 1 : 3

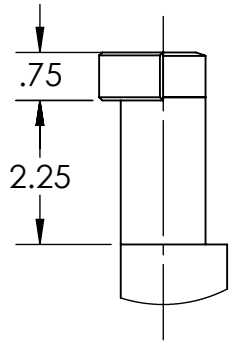

DETAIL M
SCALE 1 : 3

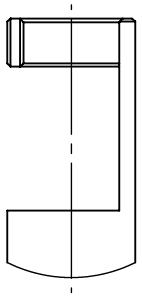

DETAIL L
SCALE 1 : 3

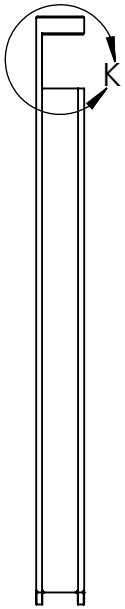

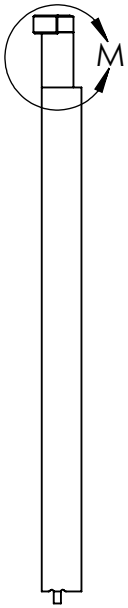

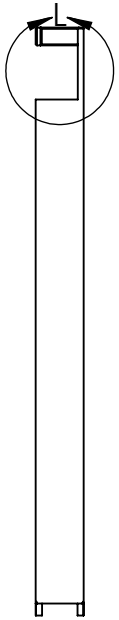

UNLESS OTHERWISE SPECIFIED:		NAME	DATE	Worcester Polytechnic Institute
Tolerance are as followes: X = ± .010 XX = ± .010 XXX = ± .005 Angular Tolerances ±1°	DRAWN	MBR	4/21/09	TITLE:
	CHECKED	GDL	4/22/09	Shaft: Arm Detail
	ENG APPR.			
	MFG APPR.			
INTERPRET GEOMETRIC TOLERANCING PER:	Q.A.			
MATERIAL	PART NUMBER:			SIZE A · DWG. NO. 12C · REV 0
FINISH	10			
DO NOT SCALE DRAWING				SCALE: 1:3 · WEIGHT: · SHEET 3 OF 5

5 4 3 2 1

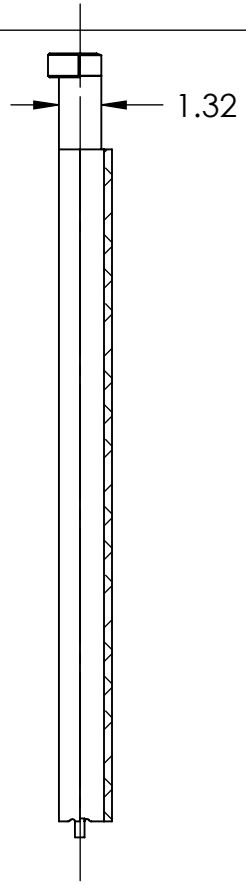

SECTION D-D
SCALE 1 : 6

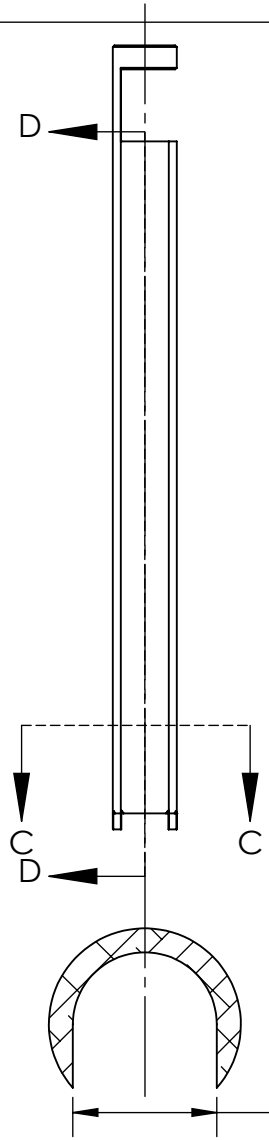

SECTION C-C
SCALE 1 : 2

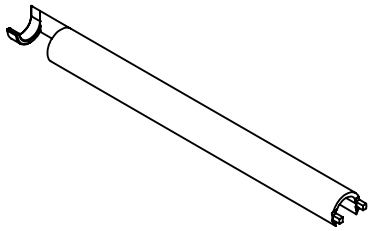

UNLESS OTHERWISE SPECIFIED:		NAME	DATE	Worcester Polytechnic Institute
Tolerance are as followes: X = ± .010 XX = ± .010 XXX = ± .005 Angular Tolerances ±1°	DRAWN	MBR	4/21/09	TITLE:
	CHECKED	GDL	4/22/09	Shaft: Section Views
	ENG APPR.			
	MFG APPR.			
INTERPRET GEOMETRIC TOLERANCING PER:	Q.A.			
MATERIAL	PART NUMBER:			SIZE A · DWG. NO. 12D · REV 0
FINISH	10			
DO NOT SCALE DRAWING				SCALE: 1:4 · WEIGHT: · SHEET 4 OF 5

5 4 3 2 1

SECTION E-E
SCALE 1 : 4

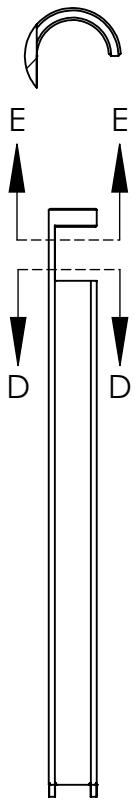

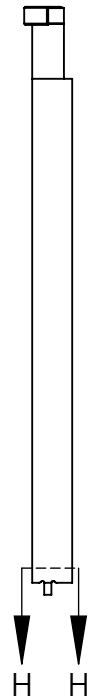

SECTION D-D
SCALE 1 : 4

SECTION H-H
SCALE 1 : 4

UNLESS OTHERWISE SPECIFIED:		NAME	DATE	Worcester Polytechnic Institute
Tolerance are as followes: X = ± .010 XX = ± .010 XXX = ± .005 Angular Tolerances ±1°	DRAWN	MBR	4/21/09	TITLE:
	CHECKED	GDL	4/22/09	Shaft: Section Views
	ENG APPR.			
	MFG APPR.			
INTERPRET GEOMETRIC TOLERANCING PER:	Q.A.			
MATERIAL	PART NUMBER:			SIZE A / DWG. NO. 12E / REV 0
FINISH	10			
DO NOT SCALE DRAWING				SCALE: 1:4 / WEIGHT: / SHEET 5 OF 5

5 4 3 2 1

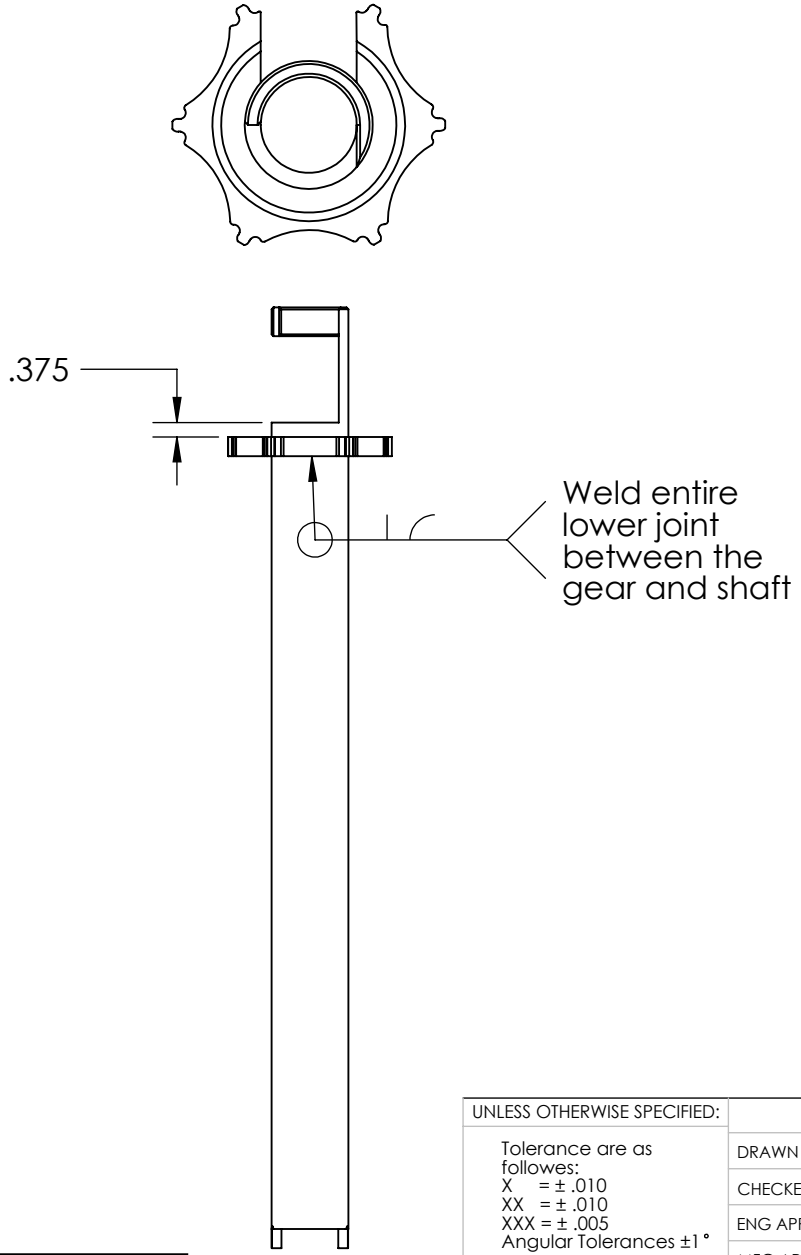

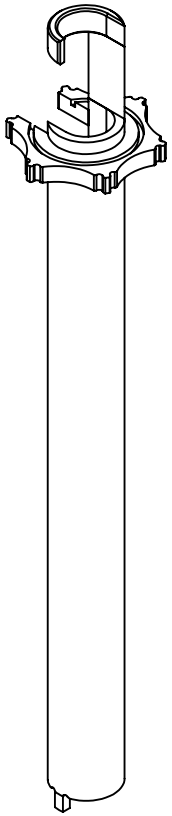

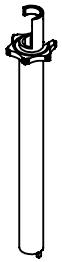

UNLESS OTHERWISE SPECIFIED:		NAME	DATE	Worcester Polytechnic Institute
Tolerance are as followes: X = ± .010 XX = ± .010 XXX = ± .005 Angular Tolerances ±1°	DRAWN	MBR	4/21/09	TITLE: Gear Shaft Assembly
	CHECKED	GDL	4/22/09	
	ENG APPR.			
	MFG APPR.			
INTERPRET GEOMETRIC TOLERANCING PER:	Q.A.			
MATERIAL	PART NUMBER: 9 and 10			SIZE A / DWG. NO. 13 / REV 0
FINISH				
DO NOT SCALE DRAWING				SCALE: 1:5 / WEIGHT: / SHEET 1 OF 1

5 4 3 2 1

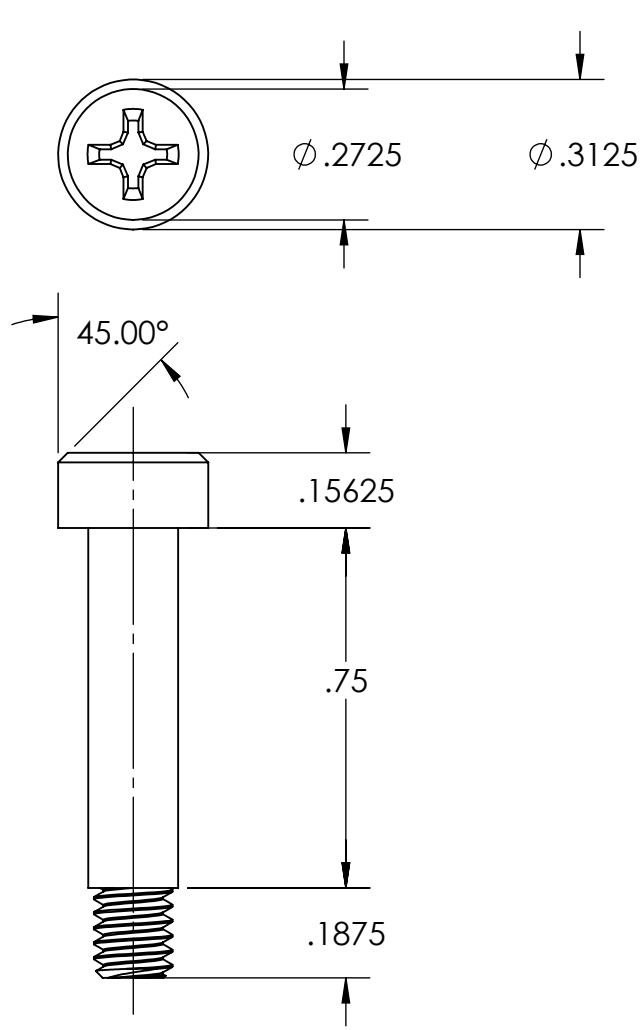

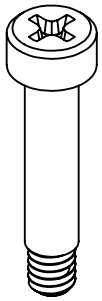

Note: 3/16 x 3/4 shoulder bolt
thread size #8-32
Phillips Head

UNLESS OTHERWISE SPECIFIED:		NAME	DATE	Worcester Polytechnic Institute
Tolerance are as followes: X = ± .010 XX = ± .010 XXX = ± .005 Angular Tolerances ±1°	DRAWN	MBR	4/20/09	TITLE: Direction Change Shoulder Bolt
	CHECKED	GDL	4/22/09	
	ENG APPR.			
	MFG APPR.			
INTERPRET GEOMETRIC TOLERANCING PER:	Q.A.			
MATERIAL	PART NUMBER: 11			SIZE A / DWG. NO. 14 / REV 0
FINISH				
DO NOT SCALE DRAWING				SCALE: 5:2 / WEIGHT: / SHEET 1 OF 1

5 4 3 2 1

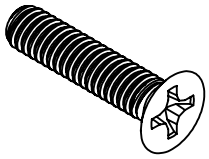

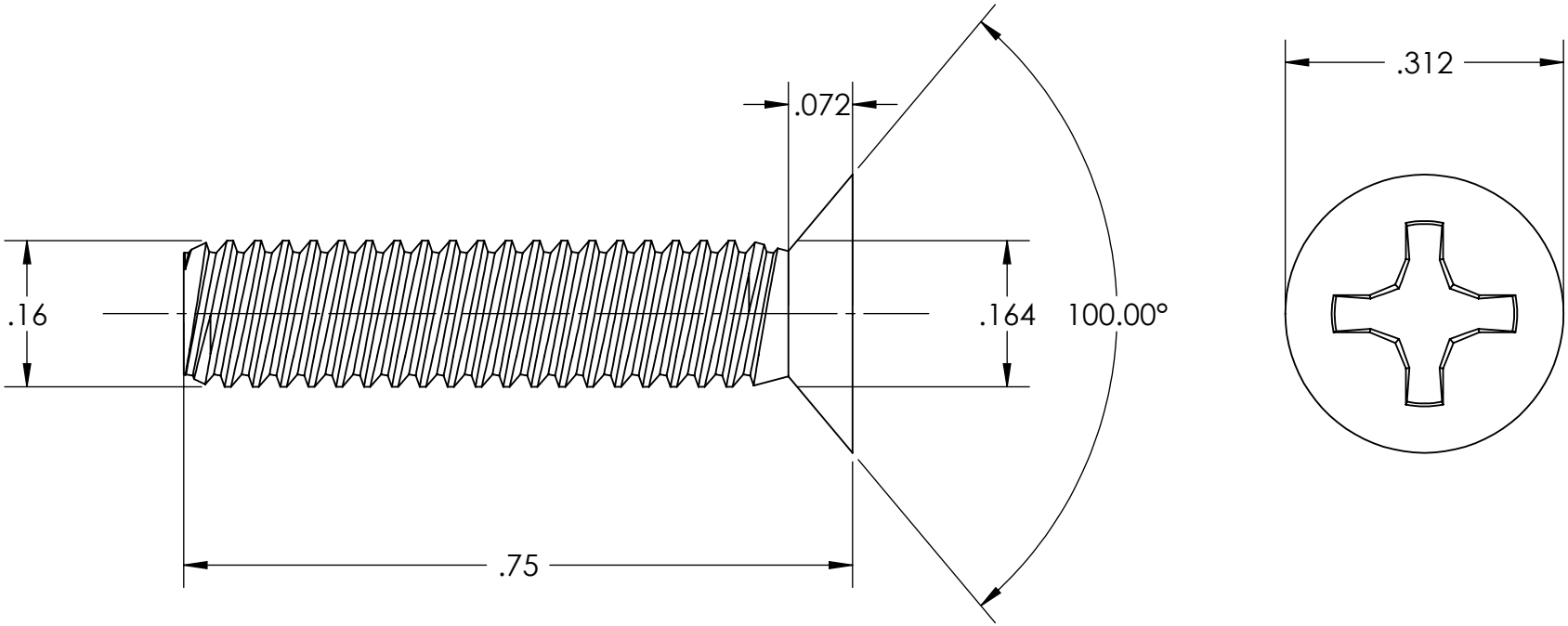

Note: .75in countersunk machine screw thread #8-32, Phillips Head

UNLESS OTHERWISE SPECIFIED:		NAME	DATE	Worcester Polytechnic Institute
Tolerance are as followes: X = ± .010 XX = ± .010 XXX = ± .005 Angular Tolerances ±1°	DRAWN	MBR	4/20/09	TITLE:
	CHECKED	GDL	4/22/09	Assembly Machine Screw
	ENG APPR.			
	MFG APPR.			
INTERPRET GEOMETRIC TOLERANCING PER:	Q.A.			
MATERIAL	PART NUMBER:			SIZE A / DWG. NO. 15 / REV 0
FINISH	12			
DO NOT SCALE DRAWING				SCALE: 5:1 / WEIGHT: / SHEET 1 OF 1

5 4 3 2 1