Project Number: MQP CAB - 09SP

Alpine Slalom Pole Wrench

A Major Qualifying Project
Submitted to the faculty of
Worcester Polytechnic Institute
in partial fulfillment of the requirements for the
Degree of Bachelor of Science

Submitted By:

_____

Mitchell B Riley

_____

Gregory D Lyons

Approved:

_____

Christopher A Brown, Advisor

Date: April 26, 2008

Abstract

The goal of this project was to design, manufacture, and test a functional tool used to install alpine ski racing poles into the snow to expedite and facilitate the ski racing course setting process. Manual gate wrenches with no moving parts are durable and easily purchasable, but are time consuming and tedious. Our final product was a manually operated, ratcheting, alpine slalom pole wrench with forward, neutral, and reverse capabilities that has been designed, constructed, and successfully tested.

Acknowledgments

We would like to thank:

- Adam Sears (WPI)
- Christopher A Brown (WPI Project Advisor)
- Torbjorn S. Bergstrom (WPI)
- Dan Flavin (WPI)
- Wachusett Mountain Race Team

This project would not have been successfully completed without their support.

Table of Contents

Abstract 3
Acknowledgments 4
1. Introduction 8
1.2 Objective 9
1.3 Rationale 9
1.4 State-Of-The-Art 9
1.5 Approach 11
2. Images 13
3. FR0: Screw in slalom poles 16
4. FR1: Supply Interface between slalom pole and device 17
4.1 Engagement to slalom pole 17
4.2 Stability Arm 18
4.3 Disengagement 18
4.3.1 Realignment 18
4.3.1 Horizontal dismount 19
5. FR2: Supply Vertical Force 20
5.1 Transmit Load to Housing 20
5.2 Weld of Handles 21
5.3 Forces through Housing Assembly 21
6. FR3: Supply Torsional Power to Screw Base 23
6.1 Pin and Flipper Description 25
6.2 Leaf Spring Assembly 29
6.3 The Gear 31
6.4 Shaft Design 37
6.5 Gear and Shaft Relationship 41
7. Physical Integration 42
7.1 Tolerances 42
7.2 Fit Types 42
7.3 Finite Element Analysis 46
8. Prototype Production 50
8.1 Materials 50

8.2 Machining 51
8.2.1 SolidWorks 51
8.2.2 Esprit 51
8.3 Fixtures and Operations 52
8.3.1 Gear 52
8.3.2 Shaft 53
8.3.3 Slider 55
8.3.4 Flippers 56
9. Testing 58
9.1 Pole Interface 58
9.2 Directional Capabilities 59
9.3 Force Testing 60
9.4 Results 60
9.5 Iteration 61
10. Discussion 63
11. Recommendations 67
12. Conclusions 69
14. Appendices 71

Fig. 1. Alpine slalom pole 8
Fig. 2. Close view of stability arm 9
Fig. 3. Current slalom pole wrench 9
Fig. 4. Close view of dogs 10
Fig. 5. Alpine slalom pole ratchet wrench exploded view 13
Fig. 6. Alpine slalom pole wrench isometric view 14
Fig. 7. Ratchet internals reverse ratchet position 14
Fig. 8. Ratchet internals forward direction ratchet 15
Fig. 9. CAD model view of dogs 17
Fig. 10. Stability arm (fillet modifications in gold) 18
Fig. 11. Handles of prototype 20
Fig. 12. Prototype dog design 22
Fig. 13. View of fillet on current technology 22
Fig. 14. Pin and flipper view 23
Fig. 15. Engaged ratchet view 24
Fig. 16. Dogs 24
Fig. 17. Flipper top view 26
Fig. 18. Flipper isometric view 26
Fig. 19. Gear teeth and slider with restricting pin 27
Fig. 20. Flipper range of motion with restricting pin 27
Fig. 21. Spring to flipper transmission angles 29
Fig. 22. Leaf spring slider assembly 29
Fig. 23. The gear 31
Fig. 24. Wrench accessing the slalom pole 32
Fig. 25. Opening angle with 4in opening 34
Fig. 26. Opening angle with 6in opening 34
Fig. 27. Gear with teeth dimensions 36
Fig. 28. Shaft components 37
Fig. 29. Shaft integration into ratcheting mechanism 38
Fig. 30. Top of shaft view (stability arm) 39
Fig. 31. Bottom of shaft view 39
Fig. 32. FEA of square joint (right view) 47
Fig. 33. FEA of square joint view of dogs 47
Fig. 34. FEA of oval cutout (side view) 48
Fig. 35. FEA of oval cutout (top view) 48
Fig. 36. Oval cutout (side view) 48
Fig. 37. Oval cutout (side view) 49
Fig. 38. View of CAM in Esprit of gear 51
Fig. 39. Fixture for shaft in Esprit 53
Fig. 40. CAM of shaft (1st operation) 53
Fig. 41. CAM of shaft (3rd operation) 54
Fig. 42. CAM of slider (1st operation) during machining simulation 55
Fig. 43. CAM for slider (3rd operation) 55
Fig. 44. Motion restricting pin view 62

1. Introduction

In alpine ski racing, courses are set on trails specifically chosen to be race trails. With the course set, each of the competitors gets a turn to navigate their way to the bottom of the course in the shortest amount of time possible. These courses are defined by a series of gates. A gate consists of between two and four slalom poles that make a plane that the racer must cross. Thus, the slalom pole is the main component of a course and is the center of attention upon which our project is based. The slalom pole consists of a plastic pole about six feet long and 27mm to 33mm in diameter. At the base of this plastic pole is a hinge which is connected to the screw shaped base. An image of a slalom pole is shown in fig. 1. To set a course, a hole is drilled into the compacted snow on the race trail. A slalom pole is then placed into the hole and wrenched into the snow until the top of the screw base is flush with the snow surface using a slalom pole wrench similar to the two displayed in fig. 2 and fig. 3.

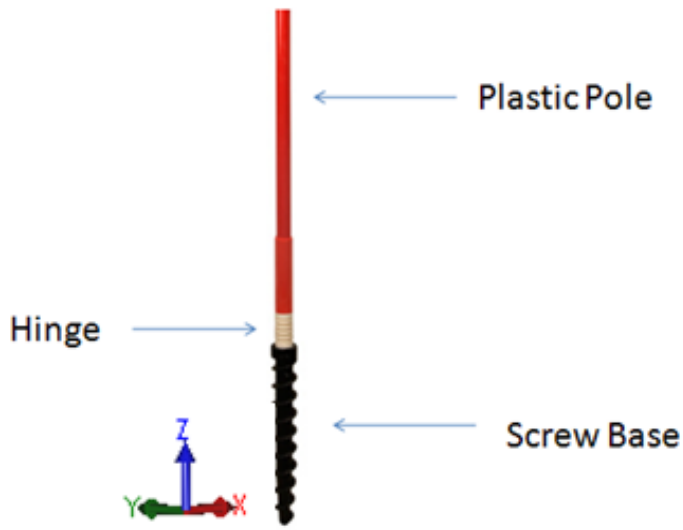

Fig. 1. Alpine slalom pole

1.2 Objective

The objective of this project was to design, manufacture, and test a functional prototype tool to install slalom poles into the snow for alpine ski racing. This goal included three major parts; interfacing with the alpine slalom pole, transmit a vertical force, and supplying the power.

1.3 Rationale

The current state-of-the-art pole wrenches are time consuming; contain design flaws, and waste motion and energy. Leaving the goal of the project open ended to prevent design limitations, the objective for the new design was to expedite and facilitate the alpine ski racing course setting process. Although the final prototype will cost more to purchase than the current state-of-the-art, the goal was to allow for the acceleration of the course setting process ultimately requiring less wrenches and incurring less cost.

1.4 State-Of-The-Art

Slalom poles are currently wrenched into the snow using what is called a slalom pole wrench or a gate key as seen in the figures below. A slalom pole wrench is made with three solid pieces of aluminum fastened together with welds. There are no moving parts in the current slalom pole wrench as displayed in Fig. 2. The current slalom pole wrench has a slot that has been cut down one side of the shaft allowing it to engage the slalom pole from a vertical position. At the top of the gate wrench there is a stability arm that reaches behind the pole to stabilize the wrench during use. A slalom pole wrench is typically engaged from a perpendicular position to the pole's orientation and then pivoted down onto the pole. The stability arm at the top then

Fig. 3. Current slalom pole wrench

Fig. 2. Close view of stability arm

helps maintain orientation between the screw base and wrench while in use. Fig. 3 displays the top stability arm more closely. The handles are welded onto the shaft. The handle broke off of this particular slalom pole wrench during use and a replacement one was welded on. Fig. 4 displays the dogs or teeth located at the bottom of the slalom pole wrench that engage the screw base of the slalom pole and are used to transmit the necessary torque. Slalom pole wrenches like these can be purchased from suppliers such as World Cup Supply (www.worldcupsupply.com) and Reliable Racing (www.reliableracing.com) for between $80 and $125.

Almost all slalom pole wrenches in use have no moving parts and are similar to this slalom pole wrench, if not identical. They are generally quite durable and successfully install and remove the slalom poles. However, they have a couple major drawbacks. The current technology wastes body movement by requiring the user to remove the hands and rotate to re-grip the gate wrenches every 180 degrees. This continual release, rotate, and engage motion provides for excess upper body movements. When a course can easily consist of forty-five to sixty of these slalom poles needing wrenching, all energy that can be conserved is needed. It currently takes two or three people two wrench most courses. Saving time and energy in the wrenching process would make it possible for less manpower to be used to wrench the same sized course.

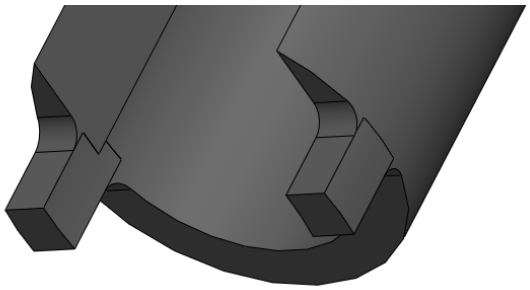

Fig. 4. Close view of dogs

An additional problem that can damage and even destroy the screw bases is the design of the dogs of the slalom pole wrench. As seen Fig. 4, there are two surfaces perpendicular to each other at the base of the gate wrench. The surface on the dogs transmits the moment generated about the center of the slalom pole, while the flat surface just above the dogs was designed to transmit the vertical load being applied while wrenching. These two surfaces are connected by a fillet, or radius. This fillet is used to reduce stress concentration at the point between the dogs and the shaft of the gate wrench. The design

flaw arising from the fillet is that it prevents the dogs from traveling fully down into the corresponding slots in the screw base. When torque is applied, the fillets raise the dogs out of the slots in the screw base which increases the stress concentration on a smaller section of the screw base and dogs. This causes the screw bases to chip and break over time. When this occurs, the screw base must be replaced or the gate is useless. In addition to lifting the dogs in the slots in the screw base, the fillets also become the location of force transmission in the vertical direction. The fillet shape has caused the flat portion of the bottom of the slalom pole wrench to rise above the flat surface of the screw base where the vertical load was meant to be applied. Ultimately the current slalom pole wrench works, but is tedious, wastes energy and time, and damages the screw base of the slalom poles. Recently discovered in research was a product called a *RatchetKey* which was found at (http://ratchetkey.com/) and appears to be similar to the prototype manufactured. Further research is being done on this product yet no patents exist on it.

1.5 Approach

By leaving the objective open ended it let the group brainstorm several ways to wrench the slalom poles into the snow. The design method of the prototype was a modified Axiomatic Design (Suh 1990) using the Acclaro DFSS software. Using this system the design parameters and functional requirements were created and recorded in a decomposition. One potential design used an external power source such as a cordless drill or small internal combustion motor. This design would have reduced the amount of human energy needed to insert the slalom poles in the snow. It was determined that the result would be bulky and much heavier than the ideal tool. Creating a powered tool would also noticeably increase the cost of the desired prototype and cause the purchasing of many parts. A second goal for the project was to manufacture all the parts on campus and a powered design would make this more difficult. Another design incorporated a device that would generate the rotational torque and motion by using a vertical handle/crank system similar to a human powered ice auger for ice fishing. Although the torque could be generated using this method, the actual moments required to rotate the screw base needed to be

counteracted. This design did not have an easy way to do this with both hands being engaged in the crank system. Size limitations were also an issue with the vertical crank method and the powered designs.

The idea decided upon was a ratcheting device that used all the components of the existing slalom pole wrench but incorporated a ratcheting mechanism. It would allow for forward, reverse and neutral operations. Also incorporated into the original design were methods of operation using gear ratios to expedite the wrenching time and to reduce the applied forces necessary. Using a similar shape to the original slalom pole wrench allows the design to cancel the applied forces in the X and Y directions while doubling the moment generated by each hand. With the ratcheting system as the key element to the design, the prototype was designed, manufactured and tested.

2. Images

Seen below in fig. 5 is the exploded view of the final design followed by a non-exploded view, fig. 6 and internal views forward (fig. 8) and reverse (fig. 7) ratcheting positions.

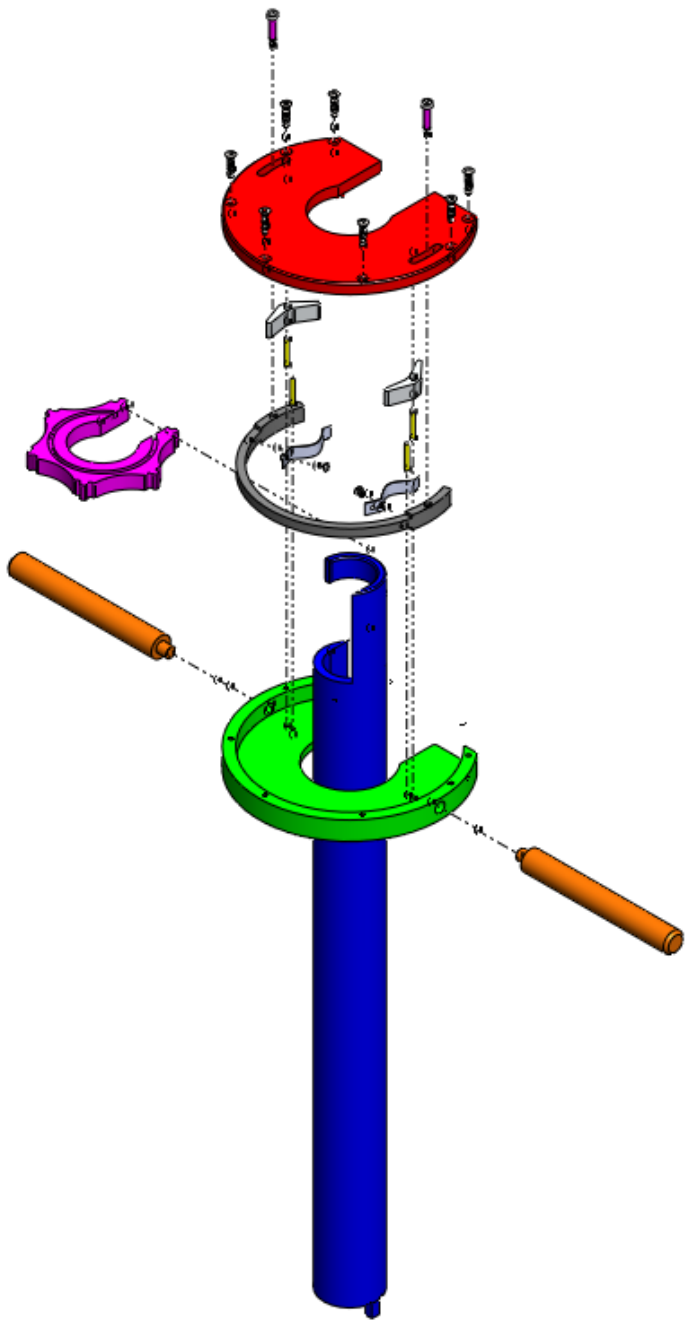

Fig. 5. Alpine slalom pole ratchet wrench exploded view

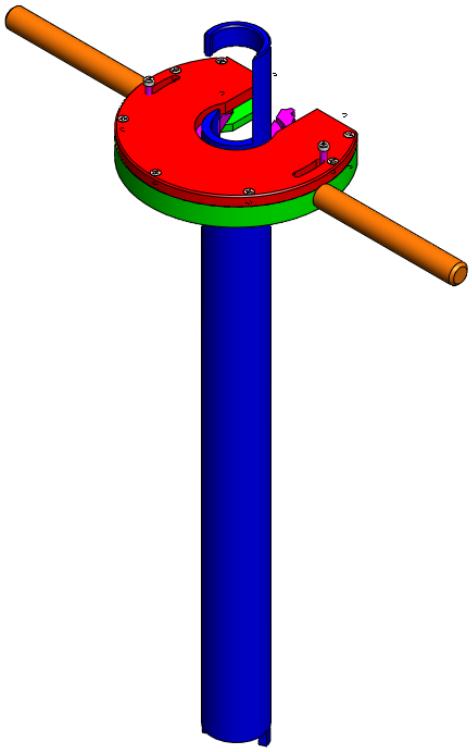

Fig. 6. Alpine slalom pole wrench isometric view

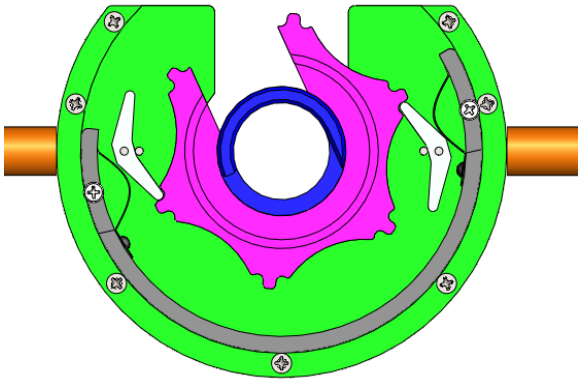

Fig. 7. Ratchet internals reverse ratchet position

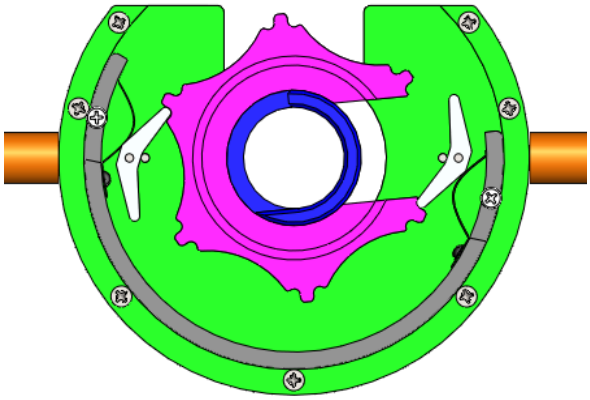

Fig. 8. Ratchet internals forward direction ratchet

3. FR0: Screw in slalom poles

The overall aim of this project is to be able to insert slalom poles into the ground. This is the functional requirement of the prototype. A design parameter for the prototype was established as a human powered system. To meet this functional requirement, three sub functional requirements were created; supply an interface between the slalom pole and the device, supply a vertical force through the device and supply torsional power to the base.

4. FR1: Supply Interface between slalom pole and device

The design of the prototype began with the decision to make the prototype engage the pole with a system similar to the current state-of-the-art. An alternative option was to design the tool as a full shaft without the horizontal cutout to engage the pole. A tool of this style would have to engage the pole from the top. This would increase difficulty of use for shorter users and be more time consuming to engage. The design of the prototype had to enable the user to engage the pole with ease and speed. The prototype needed to be able to move into position, connect to the base of the slalom pole, remain stable during use, and be removed easily.

4.1 Engagement to slalom pole

To wrench a slalom pole the force must be transmitted through the dogs of a gate wrench and into the screw base. The screw base has slots specifically designed for interface with the dogs. The design of these dogs was limited by the slots on current alpine slalom poles. The dogs designed were 0.5in long and set 180 degrees apart on the bottom of the shaft. These dogs follow the contour of the 0.25in thick (6061 T6) aluminum alloy. For the prototype the tip of the dogs were modified as well. During the use of alpine slalom poles, snow fills the slots in the screw base. When these slots are filled with snow or ice they become challenging to locate when removing slalom poles from the snow. To improve upon the design a manual chamfer about 35 degrees and 0.15 in long was added to force snow out of the slots. This improvement can be seen in fig. 9.

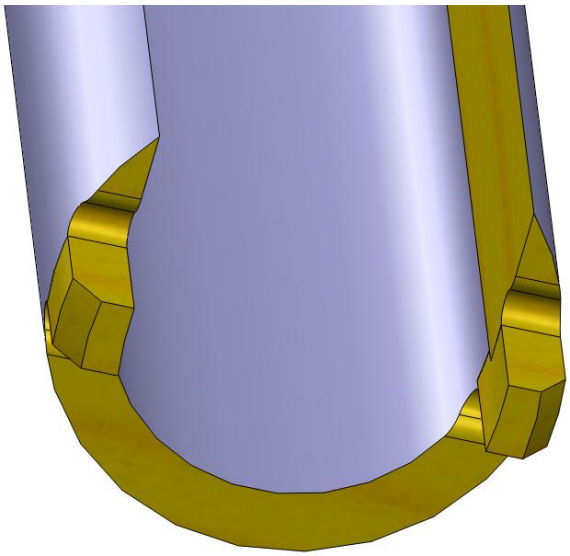

Fig. 9. CAD model view of dogs

4.2 Stability Arm

To remain stable during use the stability arm on top of shaft was designed. This piece reaches around the gate to cover the opening created by the slot to engage the pole. The prototype shaft design incorporated slight modifications that were included in construction. These were basic fillets inserted to smooth sharp corners to lower the stresses placed on them.

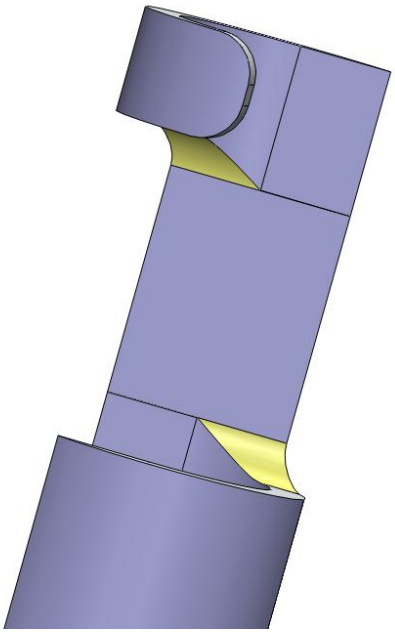

Fig. 10. Stability arm (fillet modifications in gold)

4.3 Disengagement

After the prototype is engaged, stabilized, and used effectively it needs to be removed rapidly. By designing each component that needed to interface with the slalom pole with an opening greater than or equal to the shaft opening (40mm) enough clearance was created for the pole to be removed. The design is based on a ratcheting mechanism. When the gear is covering the opening the slalom pole wrench cannot be removed horizontally. The answer to this problem is the neutral position built into the prototype along with the ease at which the wrench can be removed over the top of the pole. This is made possible by the slalom pole hinge or breakaway aspect of the pole. When an object hits a portion of the pole, it yields and falls to the ground before returning to the initial position due to this spring loaded hinge. By using the hinge's capabilities to remove the slalom pole wrench from the pole, the wrench does not need to be removed by lifting over the top but can be pulled to the side. The slalom pole bends over and the wrench slides off the pole when pulled away.

4.3.1 Realignment

In order for the prototype to be realigned, the gear, shaft, and housing must have openings that coincide. This mechanism is further explained in 6.1. With a neutral direction capability, the shaft can be freely rotated until the openings align.

4.3.1 Horizontal dismount

The device is removed from the pole using the neutral position upon alignment of the openings of the housing and gear. The prototype is raised in the z-direction to disengage the dogs followed by the end of the shaft pivoting upwards about the stability arm. The stability arm is still attached to the pole at this point. By rotating the shaft out of the opening the device can be removed.

5. FR2: Supply Vertical Force

To supply the vertical force from the human user to the slalom pole, loads need to be transferred effectively throughout the tool. In the original non-ratcheting slalom pole wrench, loads are transferred directly from the handles to the main shaft and then down through the dogs. The force is first applied from the hands of the user on the top of the handles. The vertical load is then transferred through the weld between the handle and shaft. The load is transferred through the shaft and contacts the slalom pole screw base at the intersection of the dogs and the shaft. The intersection consists of two fillets about .1in in radius that apply the force on the edges of the slots on the slalom pole screw base.

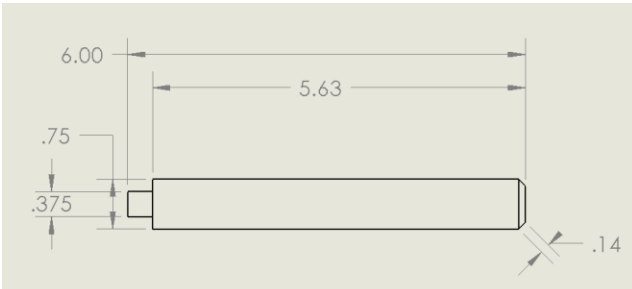

Fig. 11. Handles of prototype

The handles in the prototype are similar to the current state-of-the-art with a few minor changes. The smaller radius tap (.375 in.) is designed to fit into the ratchet housing and keep the handles in place during the welding process. A chamfer was added to the end of the handles, similar to the current non-ratcheting gate wrenches, to keep the edges smooth and user friendly. The handles are two, six inch long pieces of (6061 T6) aluminum alloy. This length is an inch shorter than current handles because the housing moves the placement of the users hands further away from the center of the shaft. Equivalent moments can be generated with shorter handles required. The prototype was designed for speed and efficiency which is assisted by shorter handles.

5.1 Transmit Load to Housing

To transmit the vertical load from the handles to the housing the handles are inserted using the housing taps placed 180 degrees apart. The original design included a thread into the housing for additional strength but was later removed. The weld alone is sufficient for strength. The handles were designed to be exactly 90 degrees from the center of the shaft opening and perpendicular to the shaft.

5.2 Weld of Handles

A weld was used to secure the handles to the prototype's housing. The original design included a thread which would have made the handles easily removable. Due to concern of stress concentration at the threads, the threads were removed from the design and the tap was kept to fixture the handles during welding. To create the weld, a T.I.G (Tungsten Inert Gas) welder was used. T.I.G welding is modernly known as G.T.A.W. (Gas Tungsten Arc Welding). A 4043 Aluminum filler rod was used with a pure tungsten electrode to complete the weld.

5.3 Forces through Housing Assembly

To transmit vertical load through the ratchet housing assembly the forces travel through the weld, to the housing assembly and into the weld of the gear. The housing assembly is constructed with a housing base component which the handles are welded to and a top piece which is fastened with machine screws to the base piece. These two pieces, the top and base of the housing transmit the vertical force from the weld to the shaft. The two contact surfaces between which the force is transmitted are the bottom of the housing top and the top surface of the gear. The gear is also welded to the shaft using G.T.A.W. (Gas Tungsten Arc Welding) and a 4043 filler rod with a pure tungsten electrode. The vertical force travels through the shaft and then into the slalom pole through the base of the shaft.

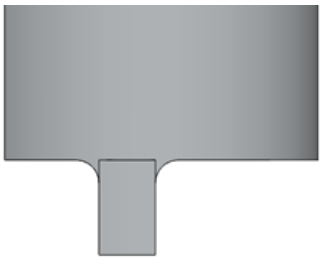

Fig. 13. View of fillet on current technology

To transmit the load to the pole base the prototype was designed differently than the current technology. In the existing slalom pole wrench the dogs are an extension of the shaft with a raised fillet (fig. 13). The design of the current technology causes the joint to be the contact point with the screw base and transmits the vertical forces to the gate wrench. In the prototype this contact surface has been eliminated by creating a curve that is embedded into the shaft above the bottom surface of the slalom pole. The curve has a radius of 0.15in to keep the moment arm (the dogs) to a minimal size. The dimension was determined from the original slalom pole wrench's fillet (fig. 13). In the design chosen to manufacture (fig. 12) this embedded radius allows for the vertical load to be dispersed over a larger area. This modification also allows for the dogs to further sink into the slots of the gate.

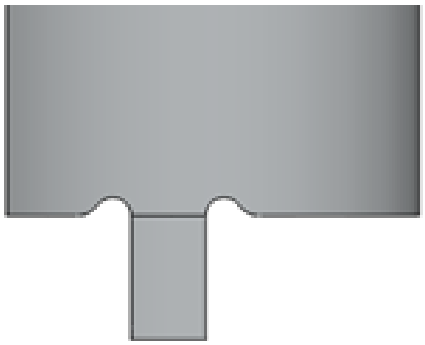

Fig. 12. Prototype dog design

6. FR3: Supply Torsional Power to Screw Base

Supplying torsional power to the screw base of the slalom pole was the ultimate goal of this design project. The screw base of a slalom pole needs to be spun clockwise to be inserted into the snow and counterclockwise to be removed from the snow. All torsional power supplied to the screw base is generated solely by the operator and was transferred to the screw base through a torsional power train system.

Two six inch long, 0.75in diameter handles are used to interface with the user. The handles include a 0.375in diameter end that is 0.4in long which are inserted and welded into the ratchet housing assembly base. The handles provide a vertical surface where the torsional force is applied. The load travels through the handles and the welded finger joints into the ratchet housing assembly base. From here the load travels two directions. It travels through the housing assembly base to the lower mount of the vertical pins and it travels through the screws clamping the ratchet housing assembly base and top. After traveling through these screws and through the housing assembly top, the torsional load is carried to the top mount of the vertical pins.

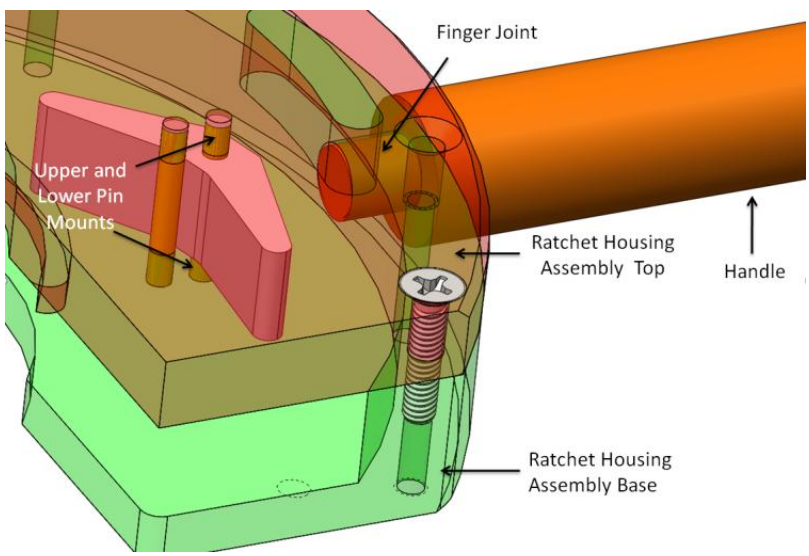

Fig. 14. Pin and flipper view

These pins, spaced 180 degrees, are firmly held in place between the ratchet housing assembly base and top. The torsional load then travels through the two vertical pins to the flippers which can pivot around the pins. The force used to switch the locations of the flippers is generated using a pair of leaf springs, one for each flipper. The leaf springs are attached to a slider which can be moved via two thumb levers to change ratcheting direction.

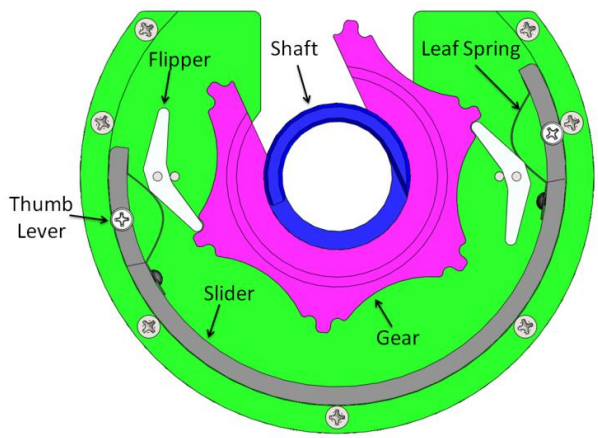

Fig. 15. Engaged ratchet view

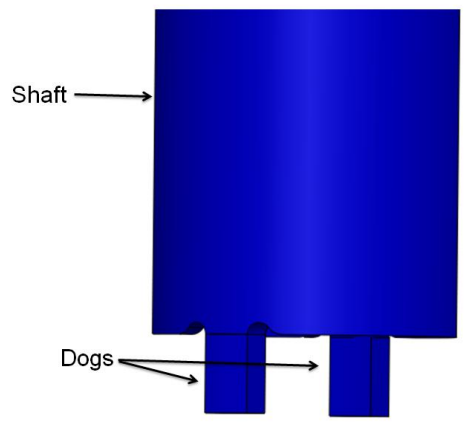

Fig. 16. Dogs

The load travels though the flippers, in both forward and reverse directions, and interfaces with the gear. When in a ratcheting position, the torsional power is supplied to the gear at the base of the gear teeth, from the flippers. The gear is welded to the shaft which transmits the torque between the two. Once the torque has been transmitted to the shaft, the shaft carries the torsional power to its base where the dogs are located. The dogs are two finger like prongs that insert into the screw base notches. The vertical surfaces of the dogs supply the torsional power to the vertical surfaces of the screw base notches. Resulting is a torsional power supply system that carries the applied loads to the screw base allowing for slalom pole rotation into the snow.

6.1 Pin and Flipper Description

In-line with the two handles, inside the ratchet housing, and just lateral to the gear are two force counteracting pins. These two pins are fixed at the top and bottom in the ratchet housing assembly top and base respectively. The pins are 0.125in diameter and 0.875 in long. These dimensions were based upon available spaces within the ratchet housing assembly and the calculated loads. These stainless steel pins are rated in double shear for 1,800 pounds. Double sheer is a situation where the object would need to shear simultaneously in two places to fail. Our application uses these pins in double shear with the two shearing locations at the top and bottom of the flippers. The pins are 0.875in long while the opening in the middle of the ratchet housing assembly is only 0.52in. This gives a remaining 0.355in of pin length for mounting split between the top and bottom of the aluminum housing. The stresses on the aluminum in the mounting holes were calculated to ensure that the aluminum would not deform when the load was applied from the pins to the mounting holes.

$$Stress = \sigma = \frac{F}{A}$$

Where: F is the applied force

A is the cross sectional area.

As calculated later in the report, the force applied through the flippers is a maximum of 373lbs. The area is (0.125in)*(0.355in) = 0.044in^2.

$$\sigma = \frac{373lbs}{0.044\text{in}^2} = \mathbf{8480}\,\boldsymbol{\frac{lbs}{in^2}}$$

The 6160 T6 aluminum used has a stress rating of 40,000$\frac{lbs}{in^2}$ (http://www.espimetals.com). Thus, the desired pin would apply a stress of less than ¼ of the capability of the aluminum that it would be mounted into. The 0.875in by 0.125in pin was acceptable for use. The location of the pins is in-line with the plane that the handles generate. Precisely where on this plane they were located depended on the shape and size of the flippers and leaf springs used to engage the flippers.

The flippers, used to transmit the torsional force to the gear, are inserted over the top of the vertical pins before the ratchet housing assembly top is screwed into place. The flippers are the central component to the ratcheting system transmitting the generated moment to the gear. The flippers have a hole in the center of rotation point that is 0.125in in diameter sliding tightly over the pins. The stresses on the (6061 T6) aluminum alloy that the flippers are made of would be less than the previous calculation since the pin's cross sectional area is the height times the width, (0.125in)*(0.5in). With a height of 0.5in, the flippers have more surface area in contact with the pins than the two pin mounts combined have with the housing. The flippers easily sustain the applied loads and stresses against the pins. The flippers are shown in fig. 17 and fig. 18.

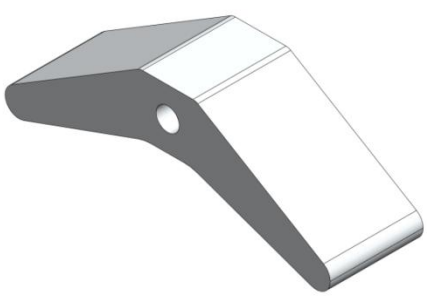

Fig. 18. Flipper isometric view

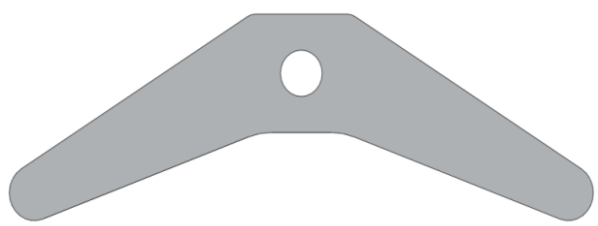

Fig. 17. Flipper top view

The flippers have three flat surfaces on the back. These surfaces allow for the three flipper positions which correspond with the forward, neutral and reverse capabilities. When the spring

is applying a force on the flat surface directly above the through hole, neither end interfaces with the gear. This provides for the neutral position where the shaft and gear spin freely in both directions. When the spring force is applied to the flat surfaces on either side of the pin hole, the flipper pivots. The side with the applied spring force then slides forward and engages the gear. This engaged end is then able to slide into position at the base of a gear tooth and transmit the applied moment. The disengaged end refrains from contact with other components.

The thickness of the flippers was determined from the size of the gear. The gear, to be explained shortly, is 0.5in thick which is derived from the applied stress load. The 0.5in thick flippers match the thickness of the gear. The load is applied from the flippers to the gear, so the stresses on the two separate components are the same. The radii at each end of the flipper were designed to closely match the inner radii at the base of the gear teeth. This allows for the most

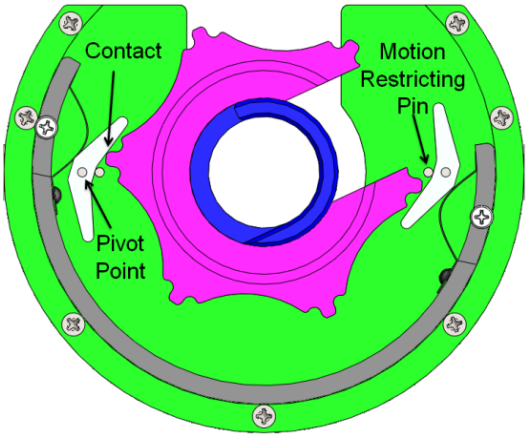

Fig. 19. Gear teeth and slider with restricting pin

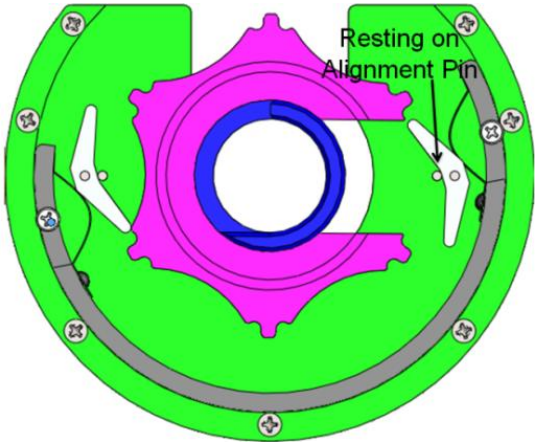

Fig. 20. Flipper range of motion with restricting pin

possible surface area between the gear and flipper, reducing the stress concentration.

With the shape and size of the flippers defined, it was possible to determine the exact location of the pin that the flipper pivots around. This pin wanted to be as close to the center of the device as possible to minimize the size of the housing. The pin location needed to provide for two constraints. While one end of the flipper is engaged, the teeth of the gear needed to pass inside the disengaged end.

Additionally, after passing the disengaged end, the gear teeth needed to contact the flipper past the pivot point as in fig. 19.

Contacting the flipper past the pivot point ensured that the gear tooth would push the flipper and compress the leaf spring while the gear tooth spun past the flipper end. Immediately after the gear tooth passed the end of the flipper, the spring would push the flipper end forward and in position to ratchet. This process is continually repeated to engage the gear teeth in any of the six positions of the gear.

The design incorporates the use of two flippers as the above image displays. Only a single flipper, or moment converting point, is required to transfer the moment. In fact, most ratchet wrenches only have one "flipper" or moment transferring point. However, as a moment is defined as force times the distance from the center point, what is really being applied is not a moment, but a horizontal force applied at a distance from the desired location. The moment is generated using a lever arm. Generating this moment using a single lever arm would provide the necessary rotational torque, but would generate a horizontal force that would need to be counteracted. This horizontal force would not be felt by the user as it is an internal force, however, the design would need to provide for a means to offset the horizontal force. The simple solution is to apply another moment transferring point spaced 180 degrees that applies a horizontal force in exactly the opposite direction. Resulting is the moment being split equally between two points, and all horizontal forces canceled internally.

In addition to passing the rotational point of the flipper before making contact, the gear teeth had to clear the alignment pin. The alignment pin is on the same plane as the handles and pivot pins of the flippers. This pin restricts the motion of the flippers to the necessary range of motion, as seen in Fig. 20. The necessary range of motion is the motion needed to engage the gear teeth and then travel free from the gear teeth when disengaged. This was needed to ensure that both flippers engaged the gear teeth in any of the six positions. Without this pin, the flipper would not engage the gear teeth notches adjacent to the gear opening. As seen in the above image, when the opening in the gear crosses in front of the flipper, the spring would push the flipper into the opening. When the flipper opposite the opening engaged, the flipper near the opening would remain free floating inside the opening. Although the wrench was tested

and worked well without this alignment pin, unintended internal forces were created. As previously described, with one flipper remaining dormant and one engaged, a horizontal force is generated. This horizontal force was canceled by the alignment groove in the gear and housing top. The alignment groove was loaded in shear while sustaining this force which it was not designed to do. The groove would wear and eventually break. Limiting the flippers movement and ensuring that all ratchet engaging positions engaged both flippers alleviated any loads and stresses being exerted through the alignment grove. All horizontal forces are canceled, and the stresses in each flipper and pivot pin are halved.

6.2 Leaf Spring Assembly

The mechanism used to physically change the ratcheting direction from forward to reverse consists of two leaf springs, one leaf spring slider and two screws that hold the leaf springs to the leaf spring slider. The assembly can be seen in Fig. 21. The leaf spring slider is a semi-circular shaped piece of aluminum that is 0.5in tall fitting snugly inside the ratchet housing assembly. The outer radius is 3.12in giving a 0.005in clearance between it and the inner radius of the ratchet housing assembly of which it slides

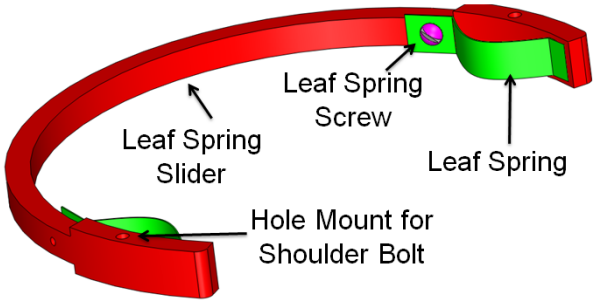

Fig. 22. Leaf spring slider assembly

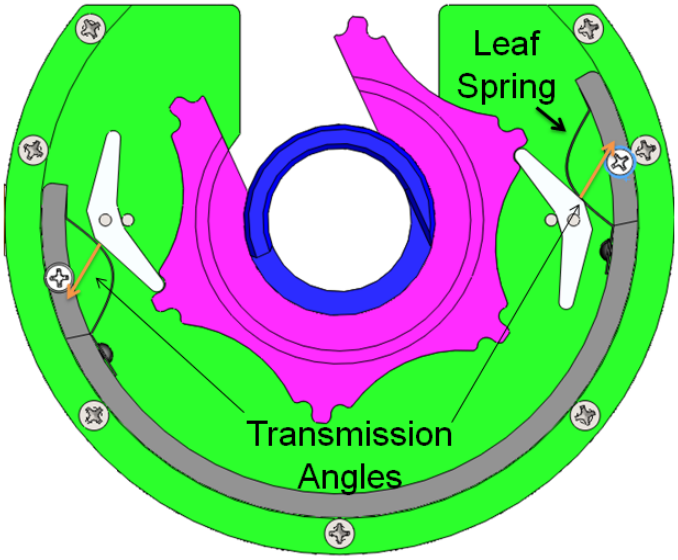

Fig. 21. Spring to flipper transmission angles

inside. With the exception of the ends, the spring slider is only 0.3in tall. This removal of material was intended to remove weight from the device. The ends needed to remain 0.5in in height so as not to pivot or tilt in the housing when the user switches from forward to reverse. The section with material removed only serves to stabilize and connect the two springs in a circular motion where strength is not an issue. The spring slider extends larger than 180 degrees of a circle. The center of the leaf springs and the hole mounts for the shoulder bolts are spaced exactly 180 degrees. The extra length of the slider is used for the non-fixed leaf spring to rest and slide upon. Each of the leaf springs is fixed to the leaf spring slider by a machine screw. The leaf springs, 0.4in tall, are mounted in the center of the leaf spring slider, height wise.

The leaf spring itself is a thin (0.15in) piece of spring steel molded to a specified shape. When resting on a table, rounded surface up, the spring is 0.37in tall. The horizontal distance of the rounded portion of the spring is 1.25in. This gives a spring that is much wider than it is tall. A shorter wider spring allows for a better transmission angle between the back of the flipper and the spring.

The transmission angle here, seen previously in Fig. 22, is pushing towards the slider at roughly a 45 degree angle. This allows for the spring to be not only drawn behind the flipper, such as on the right side of the previous picture, but also pushed behind the flipper as on the left side of the picture. A smaller narrower spring was originally intended for use. Testing determined that the transmission angle was almost tangent to the spring slider and caused the spring to compress by bringing its ends together. By compressing the wrong direction, it was difficult, and often not possible, to change ratcheting directions. When the spring would compress the correct direction, it required more force than was comfortable for the user to apply.

This is the exact opposite of the intent. The project needed the springs to flatten easily by pushing the spring ends apart to slide behind the flippers. Leaf springs with larger widths were also tested but were determined to be too flimsy and unstable. The final spring design was the best compromise among spring size choices.

With the spring assembly in place, the final portion of the direction changing mechanism is the physical link to move the spring slider assembly between its three positions. The prototype was designed with precisely placed slots in the ratchet housing assembly top. These slots would restrict the motion of the slider to the desired limits. Shoulder bolts were inserted through these slots into the two holes, spaced 180 degrees, on top of the spring slider. The spring slider provided stability as the user had two levers at their thumbs. Push one forward and the other backwards, and the ratchet is in reverse. Slide both switches the opposite direction and the leaf springs compress as they slide behind the flippers. After sliding behind the flippers, the leaf springs apply a force to the opposite flipper edge engaging the opposite end. The ratchet is now set in the forward direction. The force necessary to switch from forward to reverse is minimal allowing for speedy and simple direction changes.

6.3 The Gear

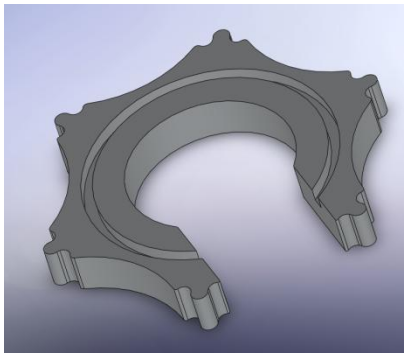

Fig. 23. The gear

The gear is the heart of the entire design. The size and shaped of the gear defined the size, shape, and function of the entire device. Success of the entire project depended not only upon a well designed gear, but also a well constructed gear. More specifically, the size of the opening in the gear, and angle generated between the center

point of the gear and the two tips of the opening were the defining factors. To design a functional and practical device, the gear design needed to be flawless.

With a ratcheting gate wrench, there were two options. The gate wrench could slide over the top of the slalom pole, or it could be designed to access the slalom pole from the side. Since slalom poles are taller than most people, sliding the gate wrench over the top of the gate would be impractical. Consequently it had to access the slalom poles from the side, which meant an opening in the gear. The device needed to access the slalom pole as shown here in fig. 19. To engage the slalom pole from the side, the opening in the gear and the shaft had to be 40mm (1.574in). This is the current open dimension for gate wrenches along the length of the shaft. It is derived from the size of the slalom poles. Slalom poles come as large as 33mm in diameter with hinges being several mm larger. A 3-4mm tolerance is needed to provide for easy access to the slalom pole. This also allowed for the gear opening to be in line with the shaft opening which helped the orientation during manufacturing.

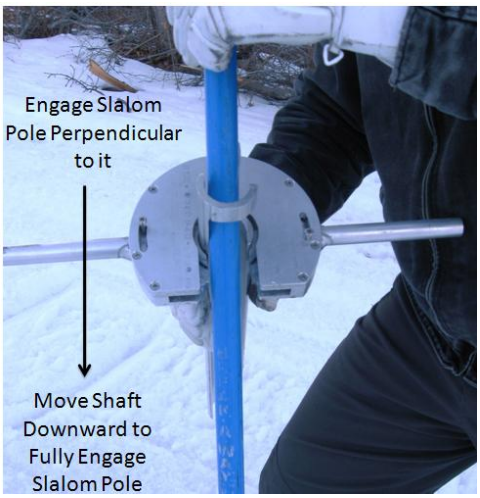

Fig. 24. Wrench accessing the slalom pole

The design constraint of a 40mm opening in the gear single handedly defined the entire device. With this opening size in mind, next needed to be determine how many evenly spaced locations around the gear we wanted to place teeth. If four teeth was used, the device would have to travel 90 degrees, or a quarter turn, between each location for the ratchet to engage. If eight teeth were used, a location to engage every eighth of a turn or 45 degrees would be created.

In order to have an angle of 45 degrees between each tooth on the gear ($\frac{360°}{8\ teeth}$), the 40mm gap in the gear needed to be less than 45 degrees. Realistically, it needed to be much less than 45 degrees as 45 degrees would span from center to center of each of the teeth. An angle less than 45 degrees would be needed to provide for the width of the gear teeth and a location for the locking mechanism to engage. When all the dimensions were considered, to have the teeth spaced 45 degrees, the opening (defined as 40mm) in the gear needed to be a maximum of 35 degrees. This angle was the driving factor to the gear size. To get a 35 degree angle, similarly to the images displayed on the following page, the general outside diameter of the gear needed to 5.5 inches. However, if the general diameter was 5.5in the actual diameter of the gear would have been about 6.25in when considering length of the teeth extending past the general diameter. With a gear this size, the total outer diameter of the slalom pole wrench would be around 9in. This was larger than we determined would be ergonomic to the user, and thus the gear had to be smaller. A smaller gear meant fewer teeth. Here are a couple images displaying how the general size of the gear would determine the angle, with a 40mm gap, which would ultimately determine how many teeth (locking positions for the ratchet) the gear could have.

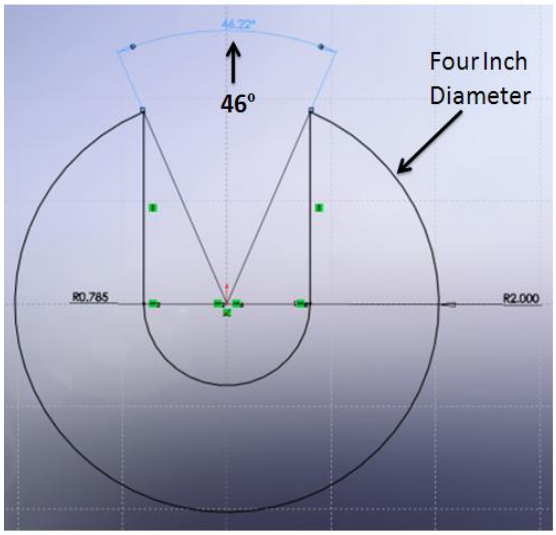

Fig. 25. Opening angle with 4in opening

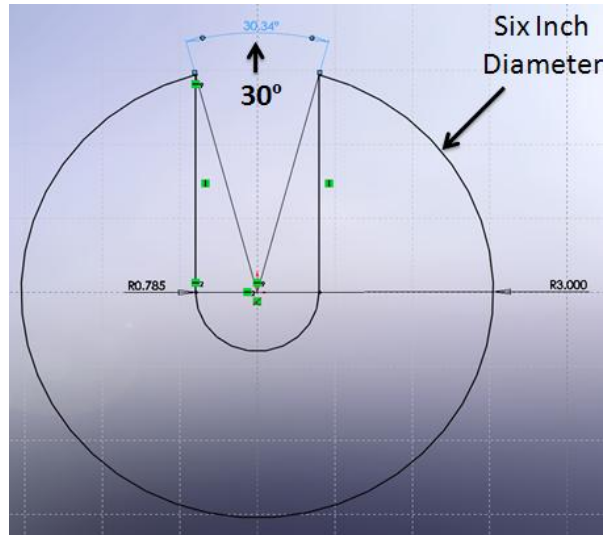

Fig. 26. Opening angle with 6in opening

After several different size tests and angle tests, a 4 inch general diameter of the gear was determined to provide a 46º opening allowing for a 60 degree evenly spaced six tooth pattern. This would give three locking positions for every 180 degrees of rotation. Four locking positions per half rotation would have been preferred, but a smaller total diameter was more important than two extra ratcheting locations.

With the gear's major dimension defined, its shape and thickness could now be determined. As this device needs to be portable and ergonomic, its weight was a large consideration. If the gear were too thick it would function properly but would add excess weight. Too thin, and the gear could warp and jam the ratcheting device. Additionally, the stress on the aluminum between the gear and the flippers needed to be calculated. Stress is defined as:

$$Stress = \sigma = \frac{F}{A}$$

Where: F is the applied force

A is the cross sectional area.

The torque or moment necessary to wrench a slalom pole was tested to be approximately 120 ft*lbs for a difficult slalom pole to wrench. This moment would be exerted at the connection point between the flippers and the gear which is 2.1in from the center of the slalom pole. It would be divided between two flippers, so the force would be halved. Since the angle of the applied force is not directly tangent to the surface of the gear, the cosine function was used to calculate the force vector. The applied force was calculated to be 373lbs from each of the two flippers.

$$120Ft * lbs = 1440in * lbs$$

$$\frac{1440in * lbs}{2\ Flippers * 2in} = 360lbs$$

$$\frac{360lbs}{\cos(15)} = \mathbf{373lbs}$$

The closest approximation of surface contact area was measured to be .05in times the height of the gear and flippers. The yield strength of (6061 T6) aluminum which was used for our prototype is 40,000psi (http://www.espimetals.com). With a desired safety factor of 2.5, the stress inserted into the stress equation is σ = 16,000psi and solving for the necessary gear height (G_h) gives:

$$G_h \rightarrow 16{,}000psi = \frac{373lbs}{G_h \times 0.05in} = 0.\mathbf{466in}$$

The necessary gear height with the assigned safety factor would be 0.466 inches or larger. To simplify calculations, a gear thickness of 0.5in was chosen.

The tooth design was one of the final design considerations. The teeth wanted to have round internal and external radii. Theses radii significantly reduce stresses at corners and make the machining of the part possible. The smallest desirable milling bit for use was $\frac{1}{8}in$ of an inch. Smaller than $\frac{1}{8}in$ and special mill orders are necessary, the mills break, and the milling time greatly increases. With a 0.125in bit the smallest radius that can be cut is 1/16in or 0.0625.

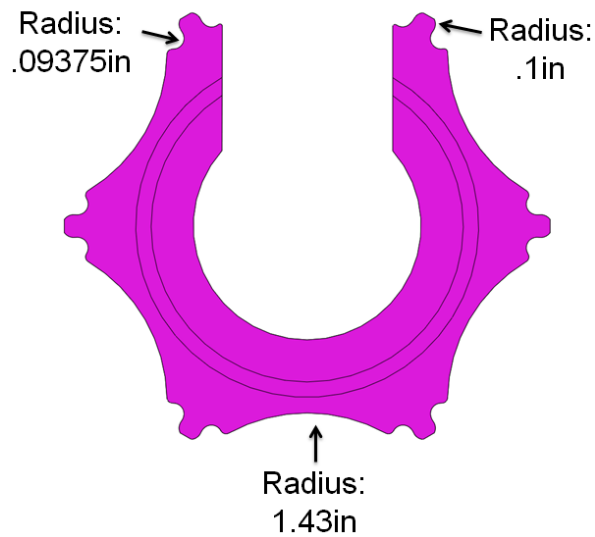

Fig. 27. Gear with teeth dimensions

With the ability to machine the gear precisely to the design, all of the inner radii had to be 0.0625in or larger. The smallest resulting radius of 0.09375in is the transition from the gear to the gear tooth. This radius matched the radius of the flipper ends closely giving as much surface area between the flippers and the gear in contact as possible.

The external radii of the edges of the gear teeth are 0.1in which is a radius that provides for smooth operation. The ends of the gear teeth are flat, shortening the gear teeth slightly allowing for the gear to rotate freely while avoiding contact with the flipper motion restriction pins explained earlier. The final significant radii of the gear are the five semicircular cutouts depicted in the previous figure with a radius of 1.43in. These cutouts do not affect performance but remove unnecessary weight. The radius of 1.43in was chosen because it removes as much material as possible while still maintaining strength and smooth operation.

The final component of the gear is the circular groove. The groove is a minimal load bearing alignment system. It maintains orientation of the gear and shaft in the ratchet assembly housing ensuring that the flippers always engage properly. Without this groove and the corresponding protrusion from the ratchet assembly housing top, the gear and shaft would have multiple degrees of freedom hindering the alpine slalom pole wrench's operation. The location, depth, and width of the groove were set based upon size and location constraints within the gear and with the understanding that loads applied would be minimal and accrued only from maintaining orientation.

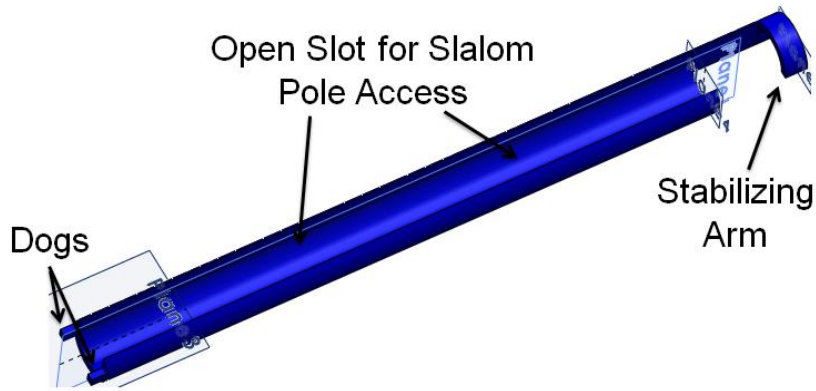

Fig. 28. Shaft components

6.4 Shaft Design

The shaft is the tubular shaped component that connects the handles and ratcheting mechanism to the screw base of the slalom pole. The two primary purposes of the shaft are to transmit the vertical load applied to the device to the screw base and to transmit the moment generated by the user to the base of the slalom pole. The vertical force ensures that the screw base bites the snow engaging the threads and ensures that the dogs stay engaged during operation. The shaft (fig. 28) integrated into the design, is quite similar to the shaft of the current, non-ratcheting, slalom pole wrenches. It consists of three major components. The first important component is the slot down the length of the shaft and the opening by the stabilizing arm. This slot and opening allow for access to the vertical slalom pole from the side as the shaft

pivots down onto the slalom pole into operating position, as seen below in fig. 24. The second important feature is the stabilizing arm at the top of the wrench. The arm is used to complete the circumference around the slalom pole and hold the wrench in position while in use. Without this arm, the wrench is easier to access the slalom pole, but is very difficult to wrench with. The final major component of the shaft is the dogs. The dogs are used to apply the torque to the slalom pole screw base, ultimately spinning the base into the snow. The screw bases have corresponding notches that the dogs fit snugly into.

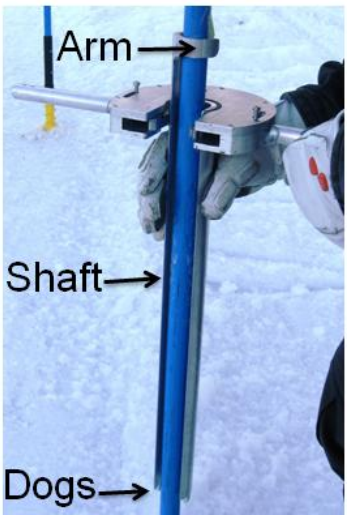

Fig. 29. Shaft integration into ratcheting mechanism

The shaft itself is cut from a 24.5in long aluminum pipe. This length is determined to be a comfortable length for the user and also allows for easy portability. The dogs protruded downward 0.5in while the rear is mounted 3.375in below the top of the shaft. This gives a handle height of 20.625in above the screw base. If the shaft were longer, it would be slightly more ergonomic but more difficult to carry. Course workers need to be able to transport these wrenches easily and safely around the mountain while skiing. The larger the length, the more difficult and dangerous it becomes. If it were shorter, it would be easier to carry and transport but would require the user to bend over excessively during use. The prototype design was not to add any additional challenges.

The outer diameter is 2in and the inner diameter is 1.5in. This inner diameter is needed as larger slalom poles are 33mm in diameter (1.3in). The hinges between the slalom pole and screw base are slightly larger, approaching 1.5in in diameter. The 2in external diameter is set primarily because a pipe with 2in OD and 1.5in ID is easily purchasable and strong enough to sustain the load. The slot down most of the length of the shaft is 40mm (1.57in) wide, as it needs

to clear the slalom pole shafts and hinges. The slot covers a distance of 23.25in. This measurement excludes the stability arm and the dog length.

The stability arm is a total of 3in tall above the rest of the shaft. It includes a 2.25in tall opening that is used to align the wrench perpendicular to the slalom pole, and a 0.75in tall stability arm. This stability arm wraps around behind the slalom pole and covers the opening in the shaft generated by the slot. A better view of the stability arm is shown in Fig. 30. The round over or fillet used at the end of the stability arm is simply to remove sharp edges. No precise radius is required. A round over may be used on other sharp corners as well, although not shown here. The vertical piece connecting the stability arm and the bottom piece of the shaft is the thickness of the pipe (0.25in) at its thickets point. It gets thinner as it moves laterally towards its edges. No precise shape is needed here. Its only purpose is to support the support arm which only sustains significant loads during improper use and rough treatment.

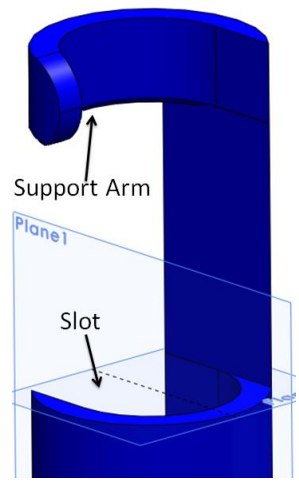

Fig. 30. Top of shaft view (stability arm)

On the opposite end of the shaft are the dogs. The design of the dogs is more crucial than the support arm. The dogs need to fit into a specific sized slot in the screw base. The allotted size in the screw base allows for the dogs to be 0.5in long and 0.30in wide. The thickness of the dogs can be left as the thickness of the pipe to provide as much strength and surface area as possible. The dog design can be seen in fig. 26. The radius transitioning into the dogs to reduce the stress

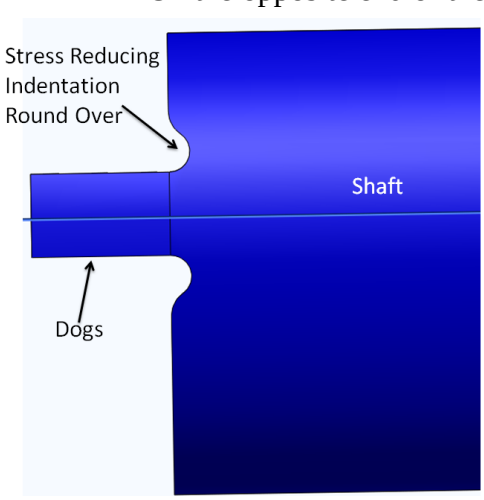

Fig. 31. Bottom of shaft view

concentration as opposed to a square joint that significantly increases stress concentration. See the Finite Element Analysis (FEA) in the report for further details. The reason an indentation radius was used was to allow for the surface that is vertical in the above picture to fully engage the screw base. In current products, the fillet round over is a protrusion from the joint. Upon careful analysis, we discovered that because the dogs are designed to fit closely into the slots in the screw base, there is no room for the protrusion fillets. The result is that these fillets act as ramps and when the moment is applied, the fillets lift the slalom pole wrench the height of the radius of the fillet. This causes the flat surface on the bottom of the shaft to be raised above the screw base. The vertical load being applied is actually applied through the edge of theses fillets. Furthermore by raising the dogs slightly, surface area for translating the moment to the screw base is reduced. This causes the screw base slots to wear and dent faster and eventually tears pieces of the screw base removing the slot that the dogs slide into. With this slot removed, the screw base is ruined and the slalom pole is useless unless another screw base is installed.

The diameter of the rounded entrance to the dogs is 0.15in with a 0.1in radius fillet rounding into the cutout. A better dimensions description of this shape can be seen in the CAD drawings in the appendix.

The final prototype included slightly filed outer edges of the ends of the dogs. This made the dogs more pointed. As slalom poles tend to be stationary in the snow for several hours with many skiers passing by, snow often fills and packs into the slots of the screw base. When removal of the slalom poles is required, it is often difficult to get the dogs to push into the slots to engage the screw base. By sharpening the dogs slightly, the end surface of the dogs act as ramps to push the snow out of the slot while still leaving plenty of the vertical contact surfaces to provide the torque.

6.5 Gear and Shaft Relationship

The gear and shaft both have exactly the same sized opening allowing for side access to the slalom poles. To function properly, these openings need to be in line with each other. When assembled, the gear is welded to the shaft 0.375in down from the top of the shaft, excluding the support arm portion. This 0.375in gives room for the weld between the shaft and the top of the gear. The prototype only used a weld on the bottom of the gear. The design provided for a weld on the top and bottom but deformation concerns due to excessive heat during the welding process limited the welding to a single weld on the bottom of the gear. Although the one weld of the prototype worked, both the top and bottom welds are recommend for future applications to increase durability.

7. Physical Integration

In order for the prototype to successfully function all of the manufactured parts had to be physically integrated. Moving and close fitting parts needed correct tolerances in order to achieve the appropriate fits. Upon examination of the current technology of the slalom pole wrench, it was clear that the dogs are a common failure, breaking off occasionally. Additionally, the dog design results in damaged screw bases. Finite Element Analysis (FEA) was used to examine these forces and help enable a better design.

7.1 Tolerances

Tolerances are applied to all designed and constructed components and are the allowed deviation from the defined dimension. The tolerances for our components are standard and are given on the drawing sheets (found in the Appendices). The tolerances give an acceptable range within which the actual size of a part may be and still function properly. For example if a dimension is given as 1.25 ± 0.01in, acceptable sizes of the part are from 1.24in to 1.26in. The engineer designs the device and sets the tolerance to ensure that if the part is between 1.24in and 1.26in, the movement and functionality of the part and entire device will not be altered. Setting the tolerances is heavily dependent upon the fit types of the components.

7.2 Fit Types

There are several types of fits that pertain to mating components of an assembly. The determining factor between different fits is the allowance. An allowance is the difference in sizes between the two mating components. For example a 1.8in diameter rod inserted into a 2.0in diameter hole has an allowance of 0.2in. The three types of fits that pertained to our

project are clearance (loose) fits, interference (tight) fits and transitional (between loose and tight) fits (*Machinery's Handbook, 27th edition*). Of the three, the clearance fit was going to be of most value to the prototype. A clearance fit generally involves parts sliding or running against each other. There are nine levels of clearance fits from class one being close sliding fits to class nine being loose running fits. The range of allowance varied from the lowest end of class one being 0.0004in to the high end of class nine being 0.0205in (*Machinery's Handbook, 27th edition*).

The two sliding fits that were most crucial were the gear inside the ratchet housing assembly and the aligning groove between the housing top and the gear. The initial design for the aligning groove was a class five clearance fit with a tolerance of 0.01in. This should have been plenty sufficient for a medium sliding fit with a lubricant applied. However, the alignment groove and protrusion did not fit together. In the machining process, there was an error in CNC milling machine that did not allow the machine to follow a curved arc. As a result, the circular shaped alignment protrusion and groove consisted of many small straight lines. This method of machining caused the protrusion and groove to be outside the acceptable allowance provided by the defined tolerance. The housing top was re-machined reducing the protrusion's thickness by another 0.005in. The newly machined allowance was 0.015in and the protrusion and groove fit snugly. With metal lubricant, LUB-E purchased at a local hardware store, the two components slid efficiently. LUB-E is a CERFLON based premium penetrating oil spray designed for use with steel, copper, bronze, brass, aluminum, and zinc.

The second major tolerance and fit application was the gear inside the ratchet assembly. This allowance was originally designed to be a class two or three clearance fit of 0.005in. This allowance was changed to 0.02 inches, a high class nine fit, after experiencing the difficulty with

the alignment groove allowance. Two hundredths of an inch is a large allowance and was determined to provide a buffer for machining and production error while still ensuring a smooth operation and smooth engagement with the alignment groove. The gear was machined to a thickness of 0.5in while the ratchet assembly housing generated an opening 0.52in.

This extra allowance proved to be very helpful. When the entire ratchet assembly was assembled, all the components fit together. The gear slid well on its alignment groove and smoothly inside the ratchet housing. The difficulty arose after welding the gear to the shaft. The welding process applied enough heat to the gear that the gear's geometry slightly changed. The gear, now attached to the shaft, no longer fit the protrusion for the alignment groove of the housing top, nor did it fit inside the ratchet assembly housing. This was not a design fault but an error created during the fabrication process. All components were machined and had previously been tested for fit, but the major components now would not assemble. Opting away from re-machining the parts, a hand held Dremel rotary tool was used to slightly enlarge the alignment groove in the gear. The Dremel was successful and the gear once again slid nicely upon the protrusion of the housing top. The gear and shaft were clamped in a vice and the gear was tapped using a rubber mallet to modify the gear until it was within the provided allowance. The housing top, and gear no longer precisely matched the designed dimensions as there had been slight warping and manual material removal, but the prototype was successfully assembled. An alternative form of welding, such as MIG (Metal Inert Gas) welding may have prevented the excess heat in the gear and avoided the warping. All designed dimensions in the CAD drawings are functional and correct if assembled properly.

All remaining fits in the slalom pole wrench are transitional fits. Transitional fits include fits in the interference and clearance fit category. These fits tend to be closer than clearance fits

but slightly larger than interference fits. Our transitional fits included the two pivot and two motion limiting pins in the housing, the flipper around the pivot pins, the handles in the housing, the gear around the shaft, and the leaf spring slider assembly.

The four pins were all 0.125in pins with a tolerance being less than or equal to 0.125in total diameter while the 0.125in drill bits all included tolerances of greater than or equal to 0.125in total diameter. The 0.125in pins fit tightly into the 0.125in holes drilled in the housing. This same fit was used for the relationship between the pivot pin and the through hole in the flipper. The flippers fight tightly over the pivot pins. LUB-E lubricant was applied to ensure smooth pivoting operations

The handle fit into the housing was a locational interference fit. This type of fit uses a small allowance and is not intended to slide. The end of the handle was turned to 0.375in while the hole drilled in the housing to receive the handle was drilled with a 0.375in bit. The 0.375in bit had a tolerance of +0.0005in to +0.001in. Since the handle only needed to be inserted into the housing once and wanted to fit as tightly as possible, the tolerance of the drill bit was the applied tolerance. The gear around the shaft was given virtually no allowance with an inner diameter set exactly to 2in which was the specified size of the outer diameter of the shaft. The actual O.D. (outer diameter) of the shaft must have been on the lower end of its tolerance because the gear had 0.02in of clearance around the shaft. This allowed the gear to slide easily over the shaft but required specific fixing to the shaft before welding.

The final fit is the fit between the leaf spring slider assembly and the inside of the housing base. This allowance was set to 0.005in being a locational clearance fit also a class two or three clearance fit. Movement between the two components would be frequent but short in

motion. Additionally, the geometry of the slider provided for significant amounts of flex. This flex is far greater than the allowance provided, thus reducing the importance of the allowance. Since the slider is a large "C" shape and has a thickness of only 0.25in, the ends easily compress together two tenths of an inch.

7.3 Finite Element Analysis

Careful consideration was taken when designing the dogs at the bottom of the shaft. These dogs are the components that ultimately transfer the torque to the screw base. As described earlier, the dogs of current alpine slalom wrenches use a slight fillet transitioning from the horizontal surface of the bottom of the shaft to the vertical surface of the dogs. This fillet seemed to be a design flaw and hinders the slalom pole wrenching process and also leads to damage of the screw bases. A new dog design was needed to prolong the screw base life span and facilitate the wrenching process.

Several options were considered. The fillet could simply be removed leaving a square corner or the fillet could be made smaller. The other option was to design an indentation or cutout that would allow for rounded surfaces while avoiding the force transfer through the fillets. Three configurations were tested in a finite element analysis program called ANSYS. The first was a square corner joint with the fillet simply removed. The second included an oval shaped cutout leading into the dogs and the third was a circular shaped cutout transitioning to the dogs. All tests were conducted with a 120ft*lb load applied

The square joint FEA performed as expected. A load bearing joint with a 90 degree angle includes a corner that is sharp. Sharp corners increase stress concentrations. The FEA image is seen in fig. 32 and fig. 33.

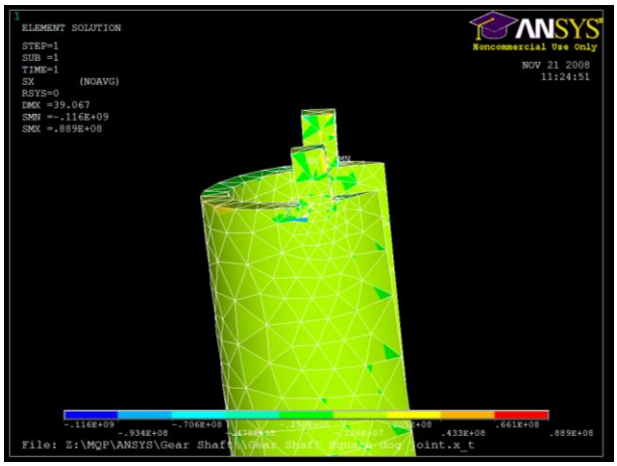

Fig. 32. FEA of square joint (right view)

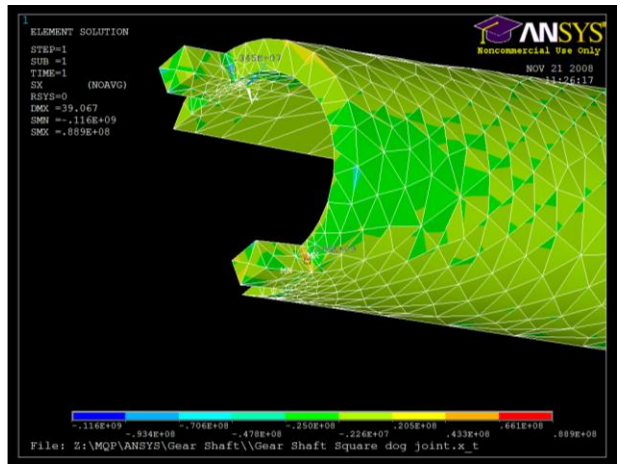

Fig. 33. FEA of square joint view of dogs

The stresses achieved here reach magnitudes of 10^9 (A unitless value in this case) directly at the joint as seen in fig. 33. Every time the mesh size is refined and the stresses are re-calculated, they increase. A square joint boosts stress concentration and would not be an effective design.

The next option that was tested was a curve transition from the horizontal surface of the shaft base to the dogs by removing extra material at the bottom of the shaft. An oval shaped cutout was designed and tested. The oval shape would provide the curve with small radii while minimizing the depth of the cutout. A shallow cutout depth allows for shorter moment arms generated by the dogs. Short moment arms minimize stresses felt at the base of the dogs. This potential design is seen in fig. 34 and fig. 35

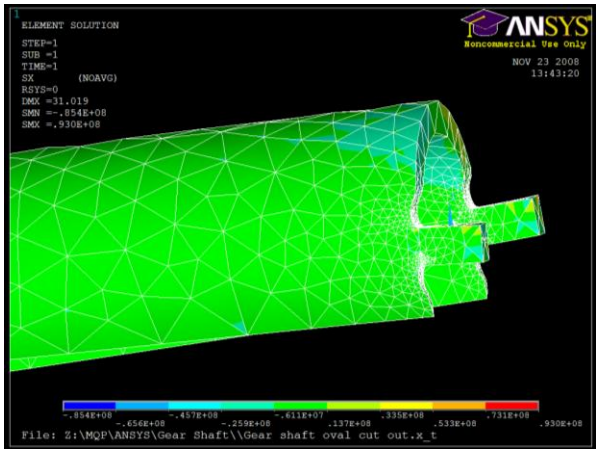

Fig. 34. FEA of oval cutout (side view)

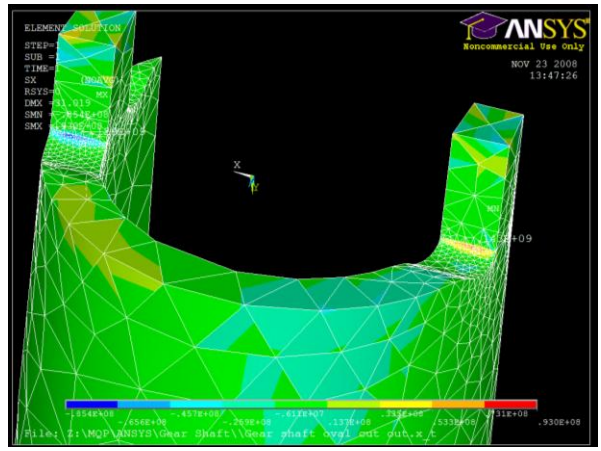

Fig. 35. FEA of oval cutout (top view)

The stresses generated in this model were only slightly less than with the square joint, however the mesh was refined an extra time which increases the values until they ultimately plateau. This value was reached at the plateau. The values given here were again in the magnitude of 10^9, but slightly lower than the square joint. The highest stress concentration can be seen in the above right picture at the base of the right dog immediately as the radius transitions to the dog. The nature of the low cutout required a relatively sharp transition radius to the dogs. This sharp radius reduced the stresses but by a lesser amount that the next design.

The final design is similar to the previous design of an oval. Instead of an oval cutout, a circular cutout is used. This increases the distance from the end of the dogs to the peak of the upward radius, increasing the moment arm length of the dog. However, the slight increase in length was easily fixed by the larger, more consistent radius as seen in fig. 36 and fig. 37.

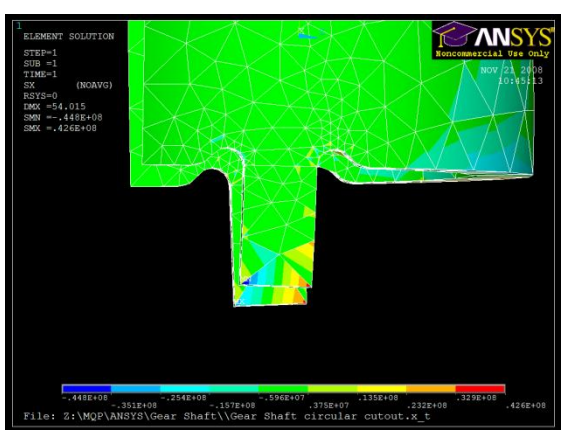

Fig. 36. Oval cutout (side view)

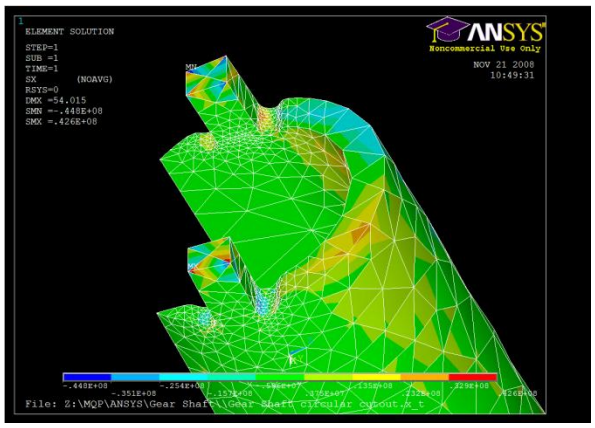

Fig. 37. Oval cutout (side view)

The mesh for this shape was refined identically to the oval cutout. The maximum stresses achieved here were in the low 10^8 magnitude at their peak, a full order of magnitude less than the previous shape. With this shape causing the lowest stresses, it was the clear choice for the final prototype design.

8. Prototype Production

The prototype was designed using Acclaro DFSS software and transformed into solid models using SolidWorks. These models were then merged into a Computer Aided Manufacturing (CAM) software program called Esprit. Tools were selected based upon the milling operation, the requirement of the cut, and what was currently available or purchasable. Individual fixtures were designed and constructed for certain parts while others were held using machine vices. The facilities used were the Washburn Shops and the CNC Laboratories. The CNC Machines used were the HAAS VM-3, HAAS Minimill and HAAS TL-1. The VM-3 and Minimill are vertical milling machines while the TL-1 is a lathe.

8.1 Materials

The material used for the majority of the prototype was (6061 T6) aluminum alloy. This was chosen based on ease of machining and availability in the Washburn Shops. Mainly used for the prototype stock pieces were 2in outer diameter pipe (0.25in thick) and rectangular stock between 0.375in and 1in thick. Also used was spring steel for the leaf spring. Different sizes and strength of leaf springs were tested. The final spring material chosen was a stainless steel alloy that was 0.015in thick. The stainless steel would fight corrosion and rusting when exposed to snow and water while the thickness provided the proper spring force for the application of the prototype. This material can be purchased from McMaster Carr with part number 2416K69. Stainless steel dowel pins with diameter 0.125in and length 0.875 in were used to hold the flippers in place and to limit their movement. Two stainless steel shoulder bolts, $\frac{3}{16}\ x\ \frac{3}{4} in$ with an 8-32 thread were used for thumb levers engaging the leaf spring slider. Seven countersunk machine screws were used to hold the housing together.

8.2 Machining

Washburn Shops and the CNC Laborites at WPI were used for all of the prototype creation. Aluminum stock was located in the shop or purchased, cut to size on the horizontal band saw and machined. Tool holders and tools were chosen based on the depth of cut, material, and operations being performed. All milling operations used (6061 T6) aluminum alloy. An array of cutters was used including face mills, end mills, ball end mills, and an assortment of drills.

8.2.1 SolidWorks

All Computer Aided Design (CAD) models were built and assembled in SolidWorks 2008. These designs were drawn from the concepts and definitions recorded in the decomposition of the Axiomatic Design. CAD models of required stock, to be loaded into Esprit, were also created and defined in SolidWorks.

8.2.2 Esprit

After the models were created in SolidWorks they were imported into Esprit and merged with the models of the stock. Tools were chosen for each operation and matched with a tool path to accomplish each cut. In

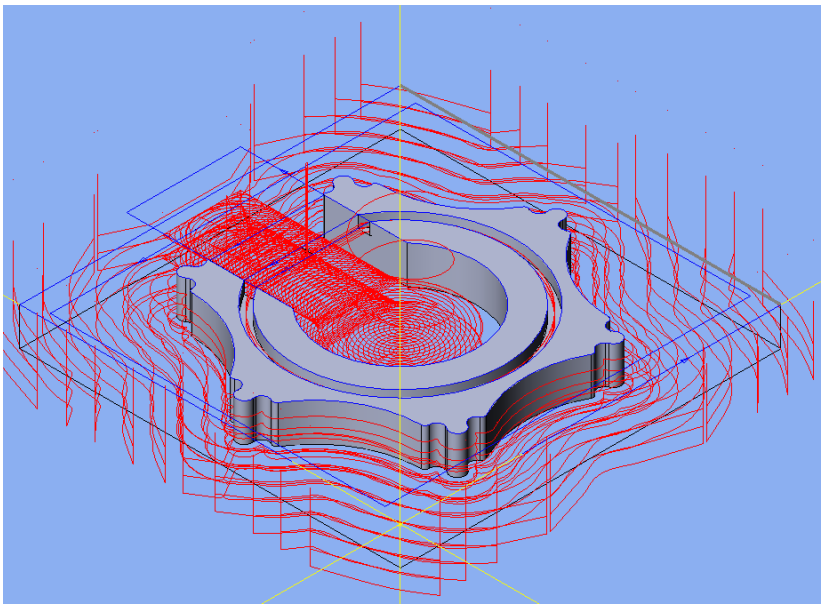

Fig. 38. View of CAM in Esprit of gear

fig. 38 the red lines are the tool paths and the blue lines are the limits of the operations, also known as chains. The model of the gear itself is the grey object in the middle. This figure includes two operations. Challenges clamping this piece to the machine table required fastening from two different locations. The two operations correspond to the two clamping positions.

8.3 Fixtures and Operations

Fixtures became more relevant as the project entered the prototype production phase. Some of the parts were modified slightly to be manufactured with more ease and efficiency. The manufacturing of each component was intended for single or low volume production. Had the project been to mass produce, rather than prototype, fixtures designed for mass production would have been created. As a result, most of the constructed fixtures were crude. The basic method used for fixtures involved machine wedges, straps, threads, and nuts. An occasional soft jaw was used if the part was an awkward size or shape. A soft jaw is a material with a low hardness number, such as aluminum or copper that is used to clamp another object. Soft jaws are often intricate shapes designed to fit the part being clamped. They are designed to deform before the part being clamped does when compressed together. Certain items require these unique fixtures before they can be machined.

8.3.1 Gear

As seen in Fig. 38 the gear needed a unique fixture set up so that the tool paths did not destroy any of the machine straps holding the stock to the machine table. The piece of (6061 T6) aluminum alloy stock was bolted down to another flat piece of stock which was bolted to the table of the VM-3. The exterior tool paths to make the outside contours were run first with a 0.5in roughing end mill. The slot for the leaf spring slider was then milled with a 0.125in end

mill. The 0.125in end mill was also used on the exterior of the gear for the finishing operations to clean the cuts from the 0.5in roughing end mill and to mill the radii at the base of the gear teeth. After the exterior operations were completed the inside was milled with 0.5in rouging end mill. A trochoidal pocketing pattern best matched the round shape of the internal cut out of the gear. During this second operation the gear edges were fastened to the table with machine straps.

8.3.2 Shaft

Before the shaft could be machined, a fixture was designed and manufactured to hold it stationary during multiple operations. The fixture for the shaft needed to be able to hold the 0.25in thick, 2in outer diameter, stock in three different positions for machining. This was done

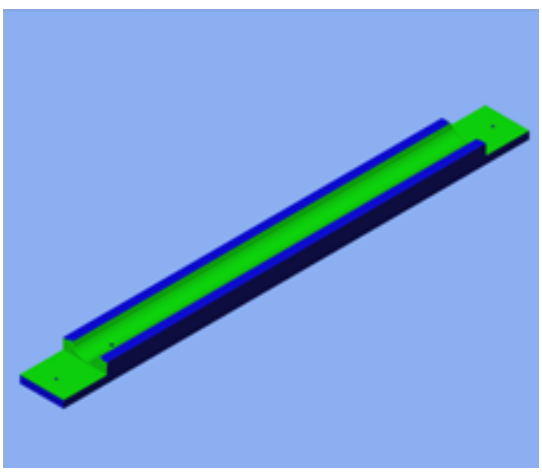

Fig. 39. Fixture for shaft in Esprit

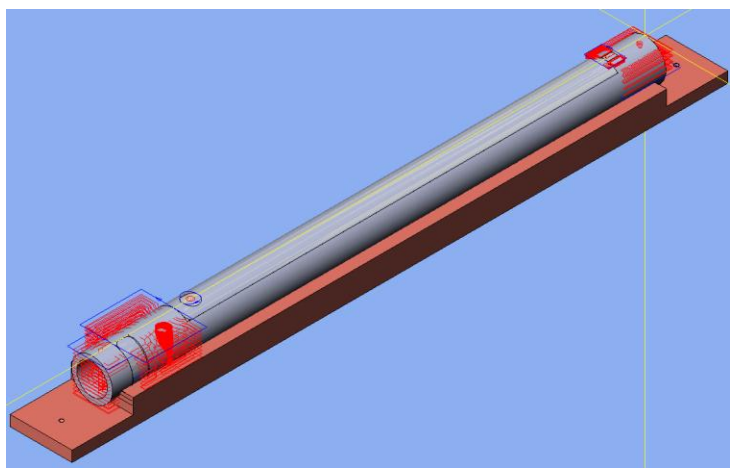

Fig. 40. CAM of shaft (1st operation)

by creating a matching circular fixture shape where the stock could be positioned. The fixture is shown in fig 39**.** Fig. 40 shows the tool paths of first shaft cutting operation. In these processes the stability arm was milled along with one of the dogs. A hole was also drilled through the shaft and down into the fixture for alignment of the next cut. The next cut was the second dog. The stock was rotated 180 degrees axially and a dowel pin was inserted into the fixture and stock for alignment purposes. A 7/64in end mill was used to cut both dogs and the slot modification for

the vertical force. The third operation was the open slot down the middle of the shaft which allows the device to interface with the slalom pole. This operation can be seen in fig. 42. In order to hold the shaft to the fixture, a steel rod was inserted through the middle of the shaft and bolted to the threaded holes in the fixture. The steel rod kept the shaft in place. Although bolted in place, there was still chatter at each end of the shaft while milling. Even parts that are fastened tightly to the table can still chatter when fixturing is difficult.

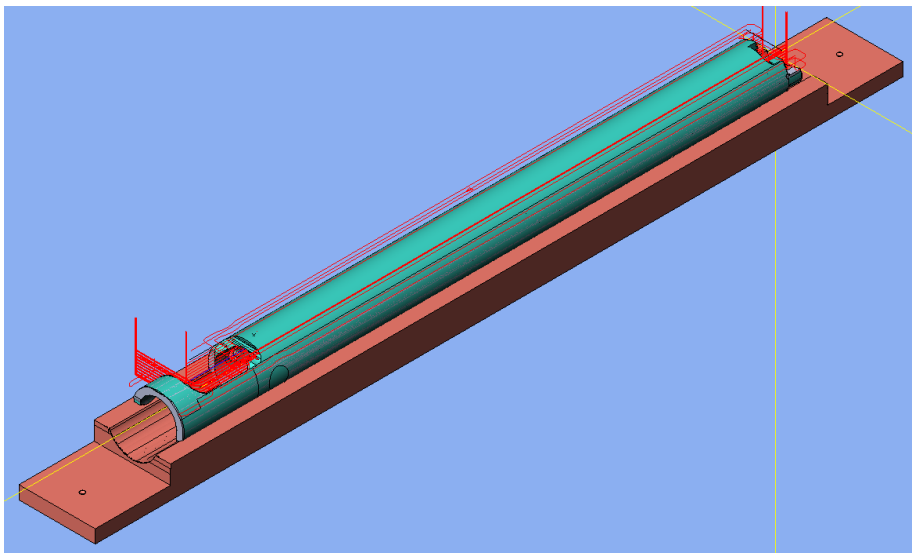

Fig. 41. CAM of shaft (3rd operation)

8.3.3 Slider

The slider, connected to the leaf springs, used to move the flippers into position was another piece that needed multiple fixtures during operation. The first operation can be seen in fig. 42. During this operation the stock was held to the table with machine straps on the top and bottom of the part. During the second operation the bottom of the stock was removed and the part itself was strapped to the table. In the third operation the final cut was made on the top of the stock to remove the slider. This final operation is shown in Fig. 43. The red lines are the cuts of the final operations that removed the part from the remaining stock. These operations were all successful. However, each needed to be done separately by changing the fixture ensuring that the operations would not crash the mills into the machine straps.

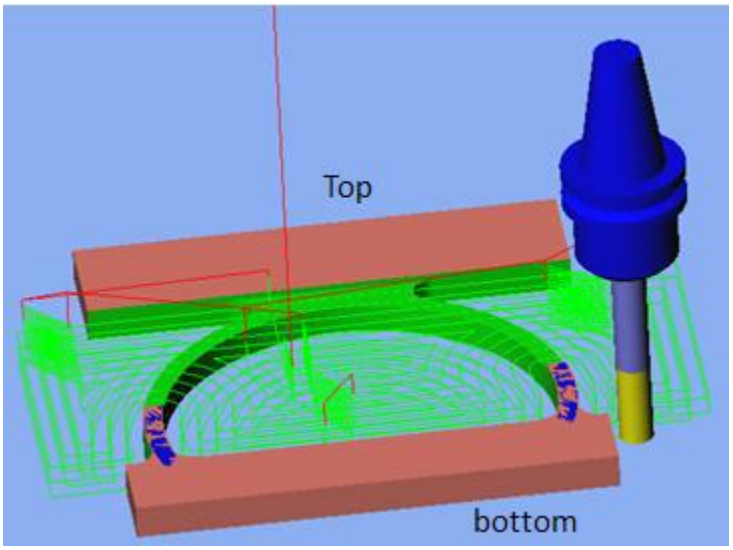

Fig. 42. CAM of slider (1st operation) during machining simulation

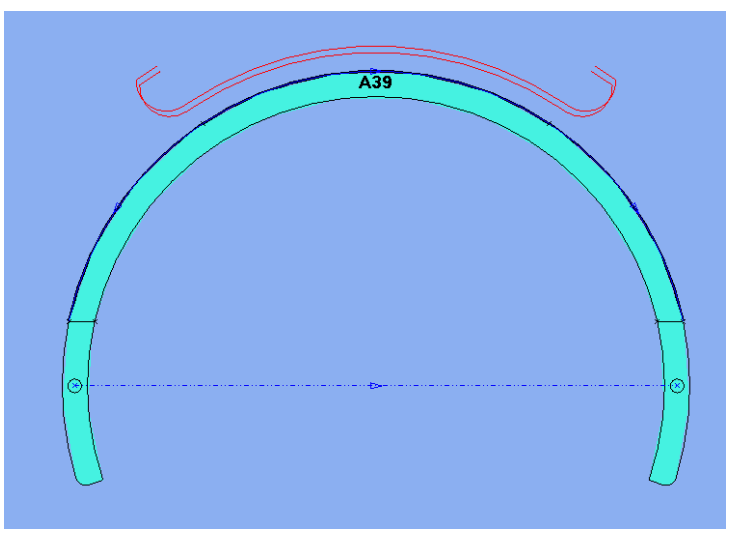

Fig. 43. CAM for slider (3rd operation)

8.3.4 Flippers

The flippers require milling from only one orientation. Components that can be machined from one orientation without being re-fixtured and re-probed are generally simpler to machine. In the flippers case, the entire outside of the component needed to be milled. This did not allow for any clamping straps from the side. To mill the flippers, the stock aluminum was cut to dimension but was cut with a thickness thicker than that of the flipper itself. To machine the flipper shape and drill the hole in the center of the flipper, the stock was fastened in a vice by the bottom. The vice was bolted to the machine table. The machining depth for the flipper was set to 0.6in while 0.75in of material was exposed above the vice. The operation was successful. Although the entire geometry of the flipper had been established, the flipper was still connected to the large mass on the bottom that had been used to fasten it in the first operation. The flipper needed to be inverted and fastened again while the rectangular mass attached at the bottom was removed with a face mill.

There was a boomerang shaped object, the flipper, that needed to be fastened to the table so another operation could remove of the excess material on top. Clamping the flipper in a vice would certainly damage it. Soft jaws were needed to fit the shape of the flipper for clamping.

The shape of the flipper was then designed not as an extrusion in SolidWorks but as an extruded cut in a solid, 0.35in deep. After the tool paths were created in Esprit, this solid was milled. It was fastened in a vice and cut using a 0.125in end mill. When complete, the shape of the flipper had now been milled inside a solid block of aluminum. Cutting this aluminum block along the lengths of the flipper arms gave two pieces. One piece matched the shape of the top of the flippers while the other piece

matched the bottom shape of the flippers. These pieces were separate and could be used to hold the flippers when clamped together.

These flipper soft jaws were placed in a vice that was clamped to the machine table. The soft jaws were slowly brought together until the flipper fit tightly between the two pieces. A strong clamping force could now be applied without risk of damaging the flippers since the effective teeth of the vice matched the flipper contour. With the flippers held in place in the CNC machine, the facing operation to remove the mass of aluminum used to fixture the first flipper operation could be performed. The results of this operation rendered flippers that had been milled to their final thickness of 0.5in. Both flippers were then ready for assembly.

9. Testing

The ratcheting alpine slalom pole wrench prototype was tested at Wachusett Mountain on March 20, 2009. The test was conducted by Professor Christopher Brown, Mitchell Riley, Gregory Lyons and Jesse Lindemer. The test included segments that simulated the typical alpine ski racing course setting process. The correct drill bit was used to drill the hole and both a current technology slalom pole wrench and the new ratcheting slalom pole wrench were used to insert and remove slalom poles. The slalom poles used during testing were provided by the Wachusett Mountain Race Team (WMRT). The final test included a course setter to drill the holes, a pole setter to place the slalom poles into the drilled hole, and a person following several slalom poles behind wrenching slalom poles on skis. This test day did not include the motion restricting pins for the flippers because they were a post-testing modification.

9.1 Pole Interface

In all cases, the current state of the art was used first to verify that the intended test was realistic. Following verification using the current technology, the ratcheting alpine slalom pole wrench was used. The ratcheting device entered the slalom pole perpendicular to the slalom pole and pivoted into position. The device was tested for two slalom pole exiting techniques. One of the most common slalom pole exiting methods is to slide the wrench over the top of the pole when skiing away from the pole. The other is the reverse entrance method by ensuring that the gear opening aligned with the housing opening and pivoting the wrench perpendicular to the slalom pole and pulling to the side. Both methods worked as designed.

Examination of the dog interface in multiple screw bases ensured that the bottom of the dogs did not hit the bottom of the dog slots in the screw base. This guaranteed that the full

vertical surface of the dogs were in contact with the screw base slots during wrenching. The full contact of the base of the shaft and top of the screw base was also verified. The new dog entrance design provided for full contact of the horizontal surface transmitting the vertical load and full contact of the vertical surface transmitting the torsional load. The dogs fit into screw bases that were damaged and extensively worn and would prohibit further damage if used in the future.

After determining that the ratchet wrench engaged the slalom poles correctly and the dogs engaged the screw base tightly, testing of the ratchet and direction capabilities was conducted. Slalom poles were wrenched into the snow using the forward ratcheting capability. Increments of 60, 120, 180, and 240 degrees were tested and worked properly. Once the screw base was fully inserted into the snow, the thumb levers were switched, changing the ratcheting to reverse. The slalom poles were then removed from the snow with the ratcheting technology. When removing slalom poles, generally the first one or two full rotations require leverage assistance provided by the wrench. After these initial rotations, people generally spin the gate by hand or spin the wrench quickly using the mass of the wrench as extra inertia. During this stage of the removal the ratchet plays no role.

9.2 Directional Capabilities

To engage and remove the ratchet wrench from the slalom pole from the side, the opening in the gear and shaft must align with the opening in the housing. Alignment of the openings was tested using forward, neutral and reverse. Alignment using forward and reverse simply involves disengaging the dogs from the screw base and spinning the shaft the opposite direction of the ratchet until the two openings coincide.

9.3 Force Testing

To determine if the ratchet could sustain the actual loads of normal use, shallow holes were drilled in the snow. These holes prevented the screw base from rotating further into the snow allowing for large loads to be applied. Greg and Mitch both applied loads of their strength ability to the ratchet wrench using different ratcheting positions. The mechanism sustained all applied loads.

9.4 Results

The ratcheting wrench entered and exited the slalom poles with ease from the side of the pole. The only drawback came when traveling from one slalom pole to the next during wrenching. Often, course setters installing these slalom poles will simply hold the wrench and ski away from the slalom pole. The pole bends over and the device slides over the top. This leaves the ratchet in the final position of the previous wrenching process and not often with the openings aligned. Before engaging the next slalom pole, the openings must be aligned. This was found to be a reasonable task to accomplish while approaching the next pole to wrench.

A myriad of slalom poles were wrenched into the snow using the forward ratcheting direction. These slalom poles were then successfully removed from the snow using the reverse function. The reverse process seems to require a little practice. Alpine slalom pole wrench users remove slalom poles differently. Removal techniques would need to be slightly altered to fit the new design but with practice, would be effective. The free rotation of the handles in one direction tends to hinder the usage of the handles for inertia while removing the slalom pole.

With experience, slalom poles could be removed as easily with this device as with current slalom pole wrenches.

The device sustained the largest applied loads when 2 users attempted to ratchet in a slalom pole together. The device flexed slightly when only one of the two flippers engaged. The flippers have the built in safety factor protecting them. The flexing was experienced by the protrusion from the housing top in the alignment gear. This alignment mechanism had to counteract the horizontal components generated by applying a moment in one location. The alignment mechanism was not designed to sustain these forces. Although the forces were carried by the device, this flexing of the material would fatigue the aluminum and cause failure in a short period of time. A slight design change or iteration was necessary.

Overall the ratchet wrench performed precisely as designed. The single flipper engagement was a concern leading into the test and proved to be a design flaw. Even with this design flaw, the ratchet functioned smoothly and easily with no wasted effort. All reasonable applied loads were tested and maintained by the device. No timed comparison was completed between the current state-of-the-art and the new ratcheting slalom pole wrench. All individuals present at the test site had used the current technology for years and were well practiced. The new device would require a certain amount of practice to acquire similar ability levels.

9.5 Iteration

The only design change necessary to complete the consistent performance of this device was a method to ensure that at all six teeth engagement locations could consistently keep both flippers engaged. Engaging both flippers removes the stresses applied to the alignment groove

and reduces the loads on the individual flippers in the location where only one would previously engage.

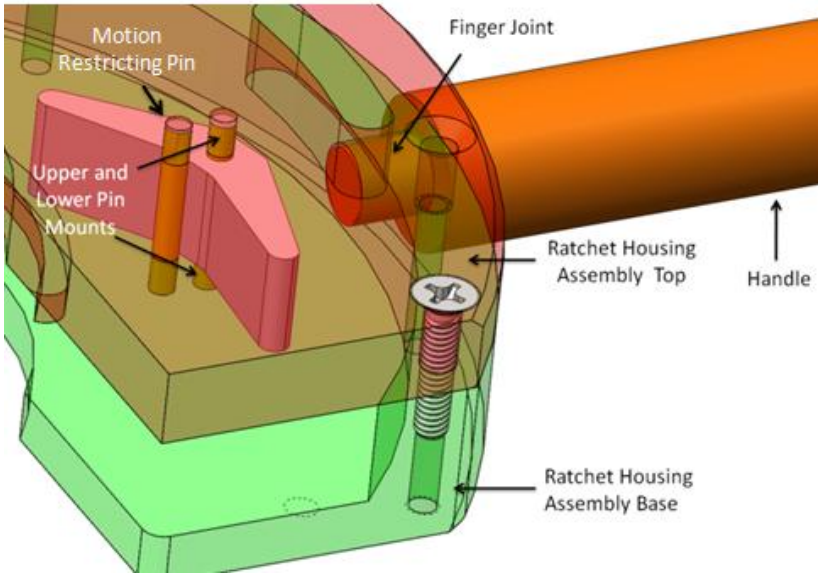

Fig. 44. Motion restricting pin view

To solve this issue, a second pin prohibits either end of the flippers from rotating forward into the opening in the gear. Resulting is a solution that required only four total extra holes drilled and some material removal from each gear tooth end to allow the gear to spin freely past the pins. These pins successfully ensure that both flippers engage gear teeth in all ratcheting positions. This pin, seen in Fig. 44 above, is called the motion restricting pin. This pin mounts in the housing base and top, similarly to the pivot pin of the flipper. The location of this pin is on the plane with the pivot pins and handles, 0.234in central to the pivot pins.

10. Discussion

The designed and tested prototype ratcheting alpine slalom pole wrench successfully inserted and removed slalom poles from the snow. The only modification was to improve flipper system to mitigate the loading, preventing the situation where only one tooth is engaged. Overall the prototype worked flawlessly. Loads were applied to the device in both forward and reverse directions and the ratcheting mechanism performed repeatedly with success. The design iteration to the ratchet system was not completed until April 10, 2009. Tests that were conducted pertained to the ratchets performance in relation to the added motion restricting pin. The pins, fixed central to the flipper, properly restrict the flipper's motion in both forward and reverse directions. The restricting pins have no affect on the ratchets performance except in the position where the flippers would rotate an end into the opening of the gear. The restricting pin prohibits this over rotation ensuring that the flippers engage every gear tooth. The tests in the lab concluded that the pin location was designed correctly and that the intended function was achieved. The iteration was a beneficial addition to the design.

The use of the ratcheting slalom pole wrench is dependent upon simplicity and availability. The simplicity of use implies that the device easily accesses the slalom pole, is clearly labeled forward and reverse, can be easily switched from forward to reverse, and can quickly be removed from the slalom pole. Three of the four of these are clearly performed by this device. The ratcheting mechanism is simple to change from forward to reverse. Although not labeled, an engraving on the housing top would permanently solve the issue with no internal modification required. The ratchet wrench is also easily removable from the slalom pole by sliding over the top while skiing away from the slalom pole. The only potential drawback with

this device is the lack of an easy alignment system to align the gear and the housing assembly openings for slalom pole access. This task is not difficult, but requires practice to master while traveling from one slalom pole to the next. This difficulty was tested, and found to be a minimal drawback. The one flaw in the test arises with quantity of gates wrenched. During testing this potential disadvantage of the alignment system was not a problem while wrenching in the slalom poles. As the cost of this device will certainly be 25% to 50% higher than the current state-of-the-art, the efficiency gained with the ratchet must heavily outweigh the extra cost. Any complication and time adding characteristic will inhibit sales of this product.

The current state-of-the-art alpine slalom pole wrench only maintains speed when the user has full energy. By removing and re-grasping the handles and especially by applying forces in strange angles, energy is wasted. After wrenching only a few slalom poles with the current technology, user fatigue starts to set in. Without practice, the current slalom pole wrenches may be faster for a single gate or possibly a couple of gates because the ratchet mechanism is foreign to the user. When wrenching an entire course, the ratcheting slalom wrench will save large amounts of time and energy, especially by providing for comfortable stances while wrenching. The user will no longer have to reposition their body to get a better leverage angle with the handles. The user can maintain their stance and move the handles to the desired location. Additionally, with practice, aligning the shaft and housing openings will become consistent and require minimal extra effort or time.

While conducting the testing of the prototype alpine slalom pole wrench, the users determined that the neutral position of the ratcheting mechanism is not worth engaging. Alignment of the openings is faster by rotating the free direction of the ratchet until the openings coincide. The neutral position requires both thumbs to engage and disengage and takes extra

time to find. By rotating the shaft in the non-ratcheting direction, the prototype was more efficient for alignment, allowing removal.

The design process used for this device was a version of Axiomatic Design. Axiomatic Design and the Acclaro DFSS software (www.axiomatiomaticdesign.com) program assisted the design process. Acclaro provides for two main categories that aided the design process. The Functional Requirements (FR's) are the intended functions of the device starting with the basic FR: screw alpine slalom poles into the snow. Each FR is paired with a Design Parameter (DP) which precisely describes the element of the design that will satisfy the functional requirement. For example, a FR may be to provide for application of horizontal forces. The corresponding design parameter could be two 0.5in tall and 6in long vertical surfaces on the handles. With this design method, most of the design is completed before CAD models are created. With Axiomatic Design more time is spent decomposing the individual functional requirements to establish the basis of a good design than with the common eight step design method. This thorough decomposition and analysis can be a challenge for visual designers. Using Axiomatic Design and the Acclaro DFSS software for decomposition ultimately accelerated prototype production. Less material was wasted with failed prototype parts when using the decomposition created with Acclaro. The CAD model design consisted of building the parts based on the description generated in the decomposition. This design method differs from the eight step design method with a different approach to problem solving. Ultimately, the decomposition method was successful after forming the designs into CAD models then producing a prototype.

There were only a few constraints for this project leaving the product design very open-ended. The opening in any mechanism designed to interface with the pole needed to be 40mm. The device needed to be portable, and it needed to be able to operate in cold temperatures with

snow, water, and ice prevalent. This would have allowed for a mechanism with any form of power source, which is the defining factor of a slalom pole wrench. For the chosen design, the major limiting constraint was the 40mm opening. The device needed to be portable which meant size was a large concern. With the chosen ratcheting method, this meant an opening in the gear was required. With this opening dimension a fixed value, the compromise between number of evenly spaced gear teeth and size of gear became an issue. The portability constraint desired a small gear while a small gear resulted in only four ratcheting positions. Many ratcheting positions resulted in a large gear which was not portable or ergonomic. These were the binding constrains that ultimately led to the decisions of the final design of having six teeth do ratchet with.

Much of the time spent on this project was dedicated to learning software and machining practices. The CAM software, Esprit, is an excellent program but can be a challenge for those with no CAM experience. Many hours were spent designing tool paths, choosing operations and determining which tools would produce the desired result. Although understanding the software was helpful for prototyping, it took weeks to learn the program. To save time, the parts could have been professionally machined but part of engineering design includes the knowledge of prototyping. Knowing how to construct a prototype for testing is important, however, more time could have been focused on design had the construction phase been shorter. A previous knowledge of the CAM program would have accelerated the production of the project. This could have allowed the design to include more features. One of these features could have been a mechanism used to self align the shaft and housing openings after use. The weight of the mechanism could have been reduced and the ratcheting mechanism may have been a quick

disconnect option. Another possible design idea was a gearing system to further accelerate the wrenching process.

11. Recommendations

There are two major recommendations for this project. The first suggestion derives from size while the second pertains to function. The ratchet housing assembly is still large and could be condensed. The device was tested using a hammer holster that many ski coaches and course crews previously carry. The wrench fit, but was bulky. The outer diameter of the housing is seven inches. This is the smallest dimension possible with the current prototype setup. The prototype included a gear with teeth placed around the perimeter requiring the ratchet engaging mechanism to be further from the center than the gear. A smaller gear and housing would be optimal. The recommendation would be to design a ratcheting mechanism that is taller and narrower. The entire wrench is 24.5in tall. Had the housing assembly been six inches tall and only four inches in diameter, the overall dimensions would have been smaller. To achieve this, a different kind of gear is required. One possibility is a circular gear with the teeth on the top or the bottom. The ratcheting mechanism would then be mounted above or below the gear, respectively. Even if the gear retained the same diameter as the current gear, the housing diameter would be reduced by two inches, or almost 30%. The height of the housing would thus be increased. With the teeth on the top of the gear, the bottom could then be used for an alignment mechanism. Additionally, with an alignment mechanism designed to sustain large loads, it would be possible to use a single flipper or ratcheting mechanism saving weight and allowing for a smaller gear size.

The second major recommendation is two parts and relates to function. Provide for some form of alignment mechanism that returns the opening of the shaft to the opening of the housing after use. The current ratchet allows for easy rotation but requires a little effort to ensure that the two openings align properly. A mechanism that would return the openings together by an action as simple as a button, flipping the wrench over, or with the pull of a lever would be helpful. If the user does not have to think about aligning the device it would increase the speed and efficiency of use, especially when it needs to be aligned 45-60 times for a single course. An additional recommendation is to provide for a physical mechanism that would override the ratcheting function. This apparatus would lock the ratcheting component with the openings aligned so that the entire wrench could be used similarly to a current slalom pole wrench. This would be helpful when course maintenance is conducted between racers and time is crucial. There is no time to worry about alignment or forward and reverse gears. In this case, generally a single slalom pole is wrenched and the lack of a ratcheting device is not a detriment.

12. Conclusions

The designed, manufactured and tested prototype ratcheting alpine slalom pole wrench worked quickly and efficiently while wrenching slalom poles into the snow. The dogs engaged the screw base tightly allowing vertical forces to be transferred through horizontal surfaces and horizontal forces to be transferred through vertical surfaces. The alteration of the dogs aided in removing snow from the slots on the base of the slalom pole as well. The ratcheting mechanism is comprised of tightly running fits providing for successful operation. With the ability to rotate the handles, the user can achieve maximum force position from any stance. This prototype device will save time and energy while aiding to the wrenching process of alpine ski racing courses.

13. References

"ESPI High Purity Metal Specialists." 2/22/08.http://www.espimetals.com (accessed 4/16/09).

Hughes, Jennifer . "Steps in the Engineering Design Process." http://seco.glendale.edu/~jhughes/Problem%20Solving%20WS.pdf (accessed 4/18/09).

Oberg,Erik. *Machinery's handbook, 27th edition.* 27 ed. C. McCauley, R. Heald, M. Hussain. New York: Industrial Press, 2004.

Suh, Nam *Principles of Design,*Oxford University Press, New York, 1990.

14. Appendices