Sensor Based Fixture Design and Verification

by

Radhakrishnan Purushothaman

A Thesis

Submitted to the faculty of

WORCESTER POLYTECHNIC INSTITUTE

In partial fulfillment for the

Degree of Master of Science

in

Manufacturing Engineering

by

Radhakrishnan Purushothaman
January 17, 2003

APPROVED:

Prof. Yiming (Kevin) Rong, Major Advisor

Prof. Christopher A. Brown, Director, Manufacturing Engineering Program

ABSTRACT

The objectives of Sensor Based Fixture Design and Verification (SFDV) research are to provide the means for detecting contact failure of the workpiece with fixture locators and for preventing incorrect loading of the workpiece in a fixture.

The fixtures that involve complex free-form surfaces especially in the aerospace industries face problems caused by the contact failure of the workpiece with locators. In batch and mass production defects often occur due to incorrect loading of the workpiece in a fixture by an operator due to fatigue or inadvertence. The current fixturing research is focussed on improving the fixture quality and other aspects and do not address these issues.

This research is focussed on three areas, to generate algorithms for automatically foolproofing the fixtures, to build locators with embedded sensors that could be used to verify the contact and foolproof the existing fixtures, and to design and experimentally validate fixtures for free-form surfaces with sensors to verify the location.

In foolproofing, workpieces were classified into different categories to identify the existence of a solution and the geometry was simplified and used to search for a solution based on symmetry/asymmetry to discover a foolproofing location. The algorithms were implemented in a CAD software and the solutions were verified in 3D space. The locators with inbuilt sensors were designed for foolproofing and location verification purposes and the sensors were used in case studies to establish credibility.

A sensor based fixture design method is created for the part location of free-form surfaces using fiber optic sensors. An experimental fixture with sensors incorporated in the locators was used to determine the effects of surface curvature (κ) on the sensitivity of the sensors. A new theory on best locations for the sensor based locators by utilizing κ is proposed based on the experimental results..

The SFDV implementation may help realize the dream for any manufacturing system aspiring to move beyond the six sigma levels of quality and achieve zero defects.

ACKNOWLEDGEMENTS

I thank my advisor Prof. Kevin Rong and I'am grateful to him for sponsoring my research and education at Worcester Polytechnic Institute (WPI). I also thank him for allowing me to shift the research focus from Modular fixtures, which was one of the initial inspirations that brought me to WPI but later became a mammoth in disguise. I extend my thanks to him for his professional guidance and support for the past couple of years, which has made these years enjoyable.

I thank Prof. Chris Brown and his family for helping me out during tough times and making my stay at WPI a pleasant one. I also thank them for all the memorable trips to Vermont and teaching me to ski and all the fun.

I thank all the current and past members of the research group under Prof. Kevin Rong in Computer Aided Manufacturing Lab here at WPI for their support and help. Especially I like to thank Dr. Xiangli Han who kept me abreast by constantly upgrading me with the emerging technologies, which helped to realize the dreams and made this project viable.

I thank Dr. Bill Weir, Robotics Lab Manager who maintained a friendly environment in the lab and his support for utilizing the various resources. I also thank Steve Derosier and Todd Billings of Machine Shop who helped me in different projects and their support.

I thank Prof. Mustapha Fofana, Sue Milkman and Toby Bergstrom for their support during my stay here at WPI and all my friends in the Manufacturing Program for their help, support and tolerance. I also like to thank Murali Murugavel and Ganapathi Raman from the Mechanical Department for helping me solve various problems during the project.

I thank Cantito Salvatore of Pratt & Whitney and the students in the NSF - Research Experience for Undergraduates program Jolene Maillet, Hector Macias and Patrick Mouton.

I like to thank the Keyence Corporation of America for providing the various sensors for this project and the Boston Technical Support for their help in setting up the experiments.

Lastly I would like to thank my family for their love and support during these years.

TABLE OF CONTENTS

Chapter 1. Introduction **1**
1.1 Objective 1
1.2 Rationale 1
1.3 Problem Description 2
1.4 Approach & Methods 3
1.4.1 Fixture Foolproofing 3
1.4.2 Part Location - Contact Verification 4
1.4.3 Design of Locators with Sensors 4
1.5 Scope & Limitations 4

Chapter 2. Background Research And Literature Review **5**
2.1 Fixture Location Verification 5
2.2 Sensors in Fixtures 6
2.3 Fixture Foolproofing 8
2.4 Study on Sensors 8

Chapter 3. Fixture Foolproofing **9**
3.1 What is Fixture Foolproofing? 9
3.2 Justification for Foolproofing 10
3.3 Fixture Foolproofing for Polygonal Parts 11
3.4 Algorithm for Foolproofing 3D parts 12
3.4.1 Part Classification 12
3.4.2 Determining the possible solutions 22
3.4.3 Part peeling / simplification - "Banana-Peel Algorithm" 24
3.4.4 Generating the foolproofing solutions 26
3.4.5 Validating the Solutions 29
3.5 Conclusions 30
3.6 Limitations 30

Chapter 4. Part Location - Contact Verification **31**
4.1 Introduction 31
4.2 Problem Description 33
4.3 Sensor based solutions 36
4.4 Optimization of Sensor location 37
4.5 New design approach for sensor based fixtures 40
4.6 Test Fixture Design 46
4.7 Experiment Design & Results 51
4.8 Conclusions 62

Chapter 5. Case Studies And Algorithm Verification With Integrated Locators **63**
5.1 Introduction 63
5.2 Proximity Sensors 63
5.3 Locator design 64
5.4 Proximity Sensors Used 66
5.5 Foolproofing algorithms 67
5.6 Implementation of the Algorithms 69
5.7 Results 72

Chapter 6. Conclusions **73**
6.1 Overview 73
6.2 Conclusions 73
6.3 Future Work 74

Chapter 7. References **76**

Chapter 8. Appendix - A **79**

LIST OF TABLES

TABLE 3.1 Possible solution spaces for further search 22
TABLE 3.2 Symmetry table 27
TABLE 3.3 Symmetry table - Sample Calculation (Refer Fig. 3.15) 28
TABLE 4.1 Test results - Sensor Xa 55
TABLE 4.2 Test results - Sensor Xb 56
TABLE 4.4 Test results - Sensor Xd 57
TABLE 4.3 Test results - Sensor Xc 57
TABLE 5.2 Symmetry table - Case study (Refer Fig. 3.6(b)) 68
TABLE 5.3 Symmetry table - Case study (Refer Fig. 3.6(a)) 68
TABLE 5.1 Symmetry table - Case study (Refer Fig. 3.5(a)) 68
TABLE 5.4 Symmetry table - Case study (Refer Fig. 3.5(b)) 69

LIST OF FIGURES

Figure 1.1 A case where workpiece has lost contacts with locators 2
Figure 1.2 An example for correct/incorrect workpiece loading 3
Figure 3.1 The loading possibilities due to fixture ambiguity. 9
Figure 3.2 Addition of foolproofing pin in the modular fixture to prevent incorrect loading [12] 11
Figure 3.3 Parts symmetrical around all planes and sides 13
Figure 3.4 Example parts for Category I(b)(left), Category I(c)(right) 14
Figure 3.5 Examples for Category II (a), (b), (c) (placed in order left to right) . . 14
Figure 3.6 Examples for Category III (a), (b), (c) (placed in order left to right) . . 15
Figure 3.7 Examples of asymmetrical parts 15
Figure 3.8 The various planes under consideration and their naming conventions . 16
Figure 3.9 Mid surfaces generated based on part boundary 17
Figure 3.10 Flow chart for part classification 18
Figure 3.11 Flow chart for Category I - Sub classification 19
Figure 3.12 Flow chart for Category II - Sub classification 20
Figure 3.13 Flow chart for category IV -Sub classification 21
Figure 3.14 Illustration of part peeling process. 24
Figure 3.15 Part representation after projection 25
Figure 3.16 Part representation after eliminating the actual part 25
Figure 3.17 The 8 symmetry transformations for foolproofing solution 26
Figure 3.18 Symmetry transformations P,Q,R and S on the sample part 28
Figure 3.19 The final foolproofing solution 29
Figure 4.1 A cross-sectional view of a jet engine showing blades and vanes. . . . 31
Figure 4.2 A picture of turbine vane in its fixture 33
Figure 4.3 A picture of complex surface of a blade 33
Figure 4.4 The ceramic locators in the fixture 34
Figure 4.5 Simplified fixture-workpiece illustration of non-contact of locator with the workpiece during fixturing 35
Figure 4.6 An example of different workpiece poses in fixture while maintaining contact with locators 35

Figure 4.7 Pictures of a few fiber optic sensors 36
Figure 4.8 2-D graphical representation of different cases 37
Figure 4.9 Mathematical representation of the different cases 38
Figure 4.10 Positioning the locators as far apart as possible for maximum accuracy and locational stability 40
Figure 4.11 The plot showing the surface curvature (Inset table shows the radius of curvature and the corresponding colors - units are in inches) 41
Figure 4.12 Example of curvature plots for the curves extracted from different cross sections 42
Figure 4.13 The graphical illustration of locator design with through hole for the sensor 46
Figure 4.14 Locator holder and vertical support and the assembled view for the test fixture 47
Figure 4.15 The two different base elements for the test fixture 47
Figure 4.16 The assemblies for the primary location for the test fixture 48
Figure 4.17 The assemblies for secondary and tertiary location for the test fixture . 48
Figure 4.18 The graphical illustration of test fixture assembly with workpiece loaded 49
Figure 4.19 Picture of the actual test fixture with sensors 50
Figure 4.20 The locating scheme and the locator's names/locations - viewed upside down 51
Figure 4.21 3-D curvature plot & Radius of curvatures at the locator - locations in the primary locating surface 52
Figure 4.22 Cross sectional 2-D curvature plots and the corresponding radius of curvatures (inside parenthesis) at the locators- locations in the primary locating surface 53
Figure 4.23 The setup with the help of a dial gage on CNC machining center . . . 54
Figure 4.24 Sensors at Locator - A 58
Figure 4.25 Sensors at Locator - B 59
Figure 4.26 Sensors at Locator - C 60
Figure 4.27 Sensors at Locator - 1 61
Figure 5.1 Limitation of using a non-shielded proximity sensor 64
Figure 5.2 Integrated locator with a self-contained proximity sensor 65
Figure 5.3 The two proximity sensors used for the case studies 66

Figure 5.4 The different features checked using the sensors 67
Figure 5.5 The screenshot of the window for selecting the locating surfaces . . . 69
Figure 5.6 The screenshot of the window for selecting the boundary surfaces . . . 70
Figure 5.7 The screenshot of the final generated midplanes to validate symmetry 70
Figure 5.8 The screenshot of the part before part simplification 71
Figure 5.9 The screenshot of the part after simplification using the projection functions 71

Chapter 1

INTRODUCTION

This chapter gives an overview of the research on Sensor Based Fixture Design and Verification (SFDV). The main goals, rationale, various approach and limitations are discussed

1.1 Objective

The main objective of SFDV is to confirm the fixture-workpiece compliance on the shop floor. Fixture design techniques currently focus on the Setup Planning, Fixture Planning and Configuration Design and ignores the verification of design in real-time. This approach leads to a system that lacks robustness in the manufacturing environment. The goal of SFDV is to add a new aspect during the fixture design phase to reduce the manufacturing ambiguities.

1.2 Rationale

In today's world everyone is striving hard to improve the quality and productivity of their products. A lot of emphasis is being laid on the Statistical Quality Control and Six Sigma techniques to improve quality. The Statistical Quality Control methods show significant improvements for juvenile processes. But on the other hand if the process is mature, the main source of defects is not process capability but the inadvertent human errors. To achieve zero defects in any manufacturing system, an absolute necessity is implementing

poke-yoke / foolproofing / mistake proofing techniques. These techniques not only improve quality but also prevent defects before any additional value is added to a product.

Currently poke-yoke techniques for fixturing are applied based on the experience and knowledge of the fixture designer. This research is focussed on automating this process and exploring new possibilities using the sensors in the fixtures.

1.3 Problem Description

The manufacture of precision components needs accurate fixturing. Currently, in spite of having good manufacturing capabilities, parts are often loaded incorrectly or inaccurately into the fixture. The manufacture of parts that involve fixturing complex surfaces, especially in aerospace industries for the manufacture of turbine blades, vanes and other parts needs some verification method for the location.

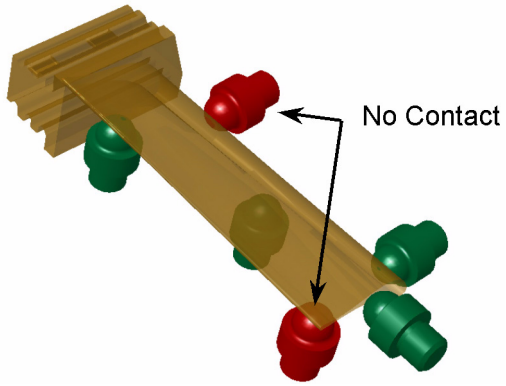

Figure 1.1 *A case where workpiece has lost contacts with locators*

1.4 Approach & Methods

The design verification methods for fixtures is classified as,

- Fixture Foolproofing (preventing incorrect loading)
- Part Location - Contact Verification
- Design of Locators with Sensors

1.4.1 Fixture Foolproofing

A workpiece can be loaded into a fixture in a number of incorrect ways (Figure 1.2), the elimination of such occurrences through a robust fixture design is fixture foolproofing.

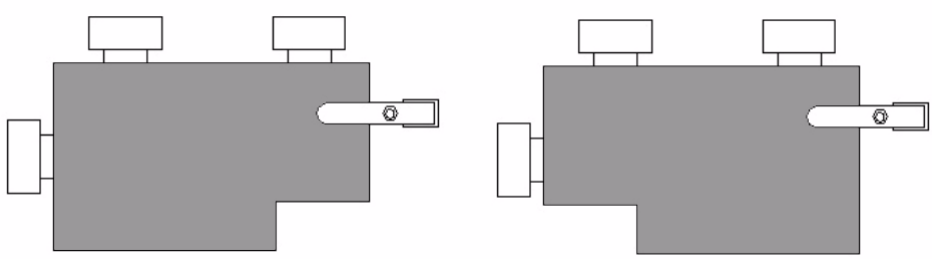

Figure 1.2 *An example for correct/incorrect workpiece loading*

The workpiece CAD geometry is studied and the various features present are used to classify the part based on the symmetry/asymmetry. Various rules and algorithms are used to determine the solutions. The solutions ranging from a simple foolproofing pin to various sensor based solutions are explored to pick an elegant solution, depending on the case.

1.4.2 Part Location - Contact Verification

Another area of focus is to verify proper contact/location of workpiece with locating elements after fixturing and during machining. This is done by placing sensors at various locations to verify the location. An integrated locator with in built sensor is also used to verify the part location. When and where sensor based systems can be effectively used are also studied based on applications and production requirements.

1.4.3 Design of Locators with Sensors

To accomplish the foolproofing and contact verification tasks, locators are designed specially with the integration of sensors in them. Different kinds of sensors are used for various foolproofing and part verification applications. The integrated locators are studied under various conditions to figure their optimum performance and limitations.

1.5 Scope & Limitations

The fixture foolproofing is an absolute necessity for any manufacturing system planning to achieve zero defect.

The major focus in current research is on the automatic fixture foolproofing and part location verification. The fixture has to accommodate the sensor systems and the various other factors like fixture ergonomics and accessibility has to be considered. Another primary focus is on developing a integrated locator with sensor on a modular fixture based platform. Such an integrated locator can be made as a standard component for systems in future. The sensor based solutions are expensive and can be justified only with the necessity and economics involved with the manufacturing system.

Chapter 2

BACKGROUND RESEARCH AND LITERATURE REVIEW

2.1 Fixture Location Verification

The various published articles in the Fixture Verification area are studied in this section. Fixture Location Verification has been primary research focus for a lot of researchers and the main focus has been on the locating performance, tolerance analysis, stability analysis and accessibility. Though the research in these areas is not directly related to Contact Verification, but has high relevance to the current research. Some of the important research are listed.

Asada and By (1985) modelled fixture - workpiece relationship in 3D space using Jacobian matrix and performed kinetic analysis for a deterministic positioning of the fixture and loading/unloading accessibility [1].

Rong et al. (1994/1995b/1996/2001) have done extensive research on tolerance and stability analysis. Locator displacements are mapped into deviations of locating reference planes. The machining surface deviation is then calculated based on locating reference plane deviations [2], [15], [16], [17], [18]& [26]

Xiong (1993) applied the kinetic model from multi-fingered robot hand grasping problem to the fixture configuration. Based on contact point positions and normal directions, the fixture configuration matrix (a.k.a. grasp matrix in robotics) is established to model the

workpiece-fixture relationship in 3-D space. This configuration matrix has similar properties to the Jacobian Matrix, but it is based on assumptions that is true only with robot hand grasping. Since fixtures, unlike the robot hands, the contact point positions will not change with workpiece displacement. [25]

2.2 Sensors in Fixtures

Wang and Nagarkar (1999) proposed a method for optimal sensor placement for automated coordinate checking fixtures. The decision on how many sensors to use and where to place them is based on Fischer information matrix using statistical analysis. Sensors are placed at locations that maximize the determinant of the Fischer information matrix. [23]

J. Ni et al. (1998 & 1999) proposed optimization methods for sensor location in assembly fixtures. The main goal of the research apart from the sensor location is fault-type discrimination and manufacturing variation reduction. The model uses three axis measurement at each of the three sensor locations that provide nine sensor variable measures. Optimal sensor location is obtained by maximizing the distance between each dominant eigen vector, obtained for each of the tooling faults. Assembly sequence is decomposed into sequence of single fixture subproblems and sensor placement is optimized. [8] & [9]

J. Shi et al. (2000) proposed a diagnostic methodology for the dimensional fault diagnosis of compliant beam structures in automotive or aerospace processes. Fault variation patterns obtained from measurement data are modelled as eigen value/eigen vector pairs using principal component analysis. The mapping of unknown faults against a set of fault pattern models developed based on statistical hypothesis tests. [14]

Sangui and Peters (2001) studied the impact of surface errors on the location and orientation of a cylindrical workpiece in fixture. A model is developed using Newton-Raphson technique to predict the impact of surface errors on the location and orientation of a cylindrical workpiece. [19]

E.C. DeMeter et al. (2001) developed algorithms for an Intelligent Fixture System (IFS) to hold a family of cylinder heads for machining operations. IFS uses a part location system to precisely locate the workpiece relative to pallet. This system uses a three axis horizontal CMM, a wrist with two axis of rotation and an analog scanning probe. The part location system is used to precisely locate the part with great speed and accuracy by using a micro-positioner to correct any misalignments and to compensate the difference between the actual and desired position. Two part location algorithms are created and evaluated experimentally. [4]

Though there were a lot of research involving sensors in fixtures, all of them are concentrated on assembly and inspection fixtures. There were no published work found in the Contact Verification area.

Various Major Qualifying Projects (MQP) at WPI under Prof. Rong and other professors were also studied. Automated Ultrasonic Inspection System Design (2001) was a project to design an automated inspection system to measure thickness and quality of resin based abrasive discs and rings. A fixture is designed to hold a wide range of rings and discs and ultrasonic sensors are used for performing the inspections. GE measure fixture redesign (2002) an existing measurement fixture was redesigned with optic sensors to improve the ergonomics and accuracy of measurement system. Continuos Improvement: Manufacturing Process Control of F-100 Turbine Vanes (1999) this project studied the various stages in the manufacturing process of a Turbine vane and proposed the new design to reduce the manufacturing variability in the manufacture of the vane. Fixture Redesign and Sensory Systems at Pratt and Whitney (2001) - Summer Project Report, a sensor system has been proposed to indicate the correct positioning of a vane within a Wire Electro Discharge Machining (WEDM) fixture. All these projects were catered to various specific processes and problems. One of the outcomes from these projects is, the use of sensors in various measurement and inspection fixtures has substantially improved the productivity and ergonomics of the fixtures.

2.3 Fixture Foolproofing

Penev and Requicha (1995) proposed an algorithm on Fixture foolproofing for polygonal parts in two dimensions. This algorithm augments modular fixture designs generated by Brost-Goldberg algorithm. The algorithm utilizes from the results obtained from the Brost-Goldberg algorithm and finds all unwanted poses of the workpart in which it contacts the three locators. All candidate grid holes with respect to the identified unwanted configuration are used for placing foolproofing pins. The algorithm has several limitations, it works only on polygonal parts and does not accept any curved edges in the work boundary. Foolproofing arsenal is limited to fixed size pins and a discrete set of possible locations. The algorithm does not seem to generalize in the three dimensional space. [12]

The research stated above was the only research that was found in the area of Fixture Foolproofing. And that too it was very specific to an existing algorithm that works on a very limited two dimensional space.

2.4 Study on Sensors

Various sensors were studied to select the best suited sensor for the fixturing applications. The senors that were researched were Proximity sensors, Precision limit switches, Ultrasonic sensors, Laser displacement sensors and photoelectric sensors. One of the promising sensors for the current application was fiber optic sensors, the optical fiber consists of the core and the cladding, which have different indexes. The light beam travels through the core by repeatedly bouncing off the wall of the cladding. The light beam, having passed through the fiber without any loss in light quantity, is dispersed with an angle of approximately 60° and emitted to the target. There are two types of fibers, Plastic-Fiber and Glass-Fiber. The optical fibers are also divided into two types the thrubeam type and reflective type. The reflective type is sub divided as parallel, coaxial and separated fibers. [20]

Chapter 3

FIXTURE FOOLPROOFING

3.1 What is Fixture Foolproofing?

There is a probability for incorrect loading of a workpiece in the fixture due to the ambiguity in the fixture design (e.g. Fig. 3.1). Fixture foolproofing is a prevention or detection of such errors before additional value is added to the parts and make the fixturing process unambiguous.

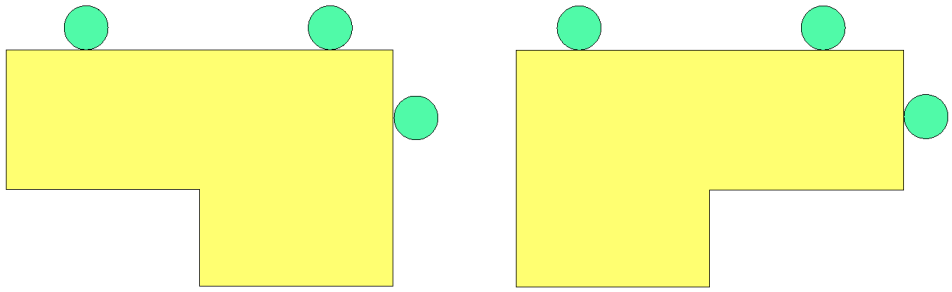

Figure 3.1 *The loading possibilities due to fixture ambiguity.*

The incorrect loading of a workpiece in the fixture can have disastrous consequences or rejection of the manufactured part.

The term foolproofing is often referred as "mistake proofing" or "poka-yoke". Poka-yoke (pronounced Poh'-kah Yoh'-kay) is a Japanese term meaning "mistake proofing". The phrase was coined by Japanese industrial engineer Shigeo Shingo in the 1960's. In the United States its often used as Poke-Yoke. Poke-Yoke principles are the widely applied to assembly operations, where the incorrect assembly is prevented by various methods. [21]

3.2 Justification for Foolproofing

In any manufacturing environment safety is a primary concern and fixtures that accept an incorrect pose a direct risk to both the man and the machine. The consequences can be severe, workpiece can take off during machining due to improper fixturing, machine tool can crash or create defective parts. In any case, room for such occurrences is unacceptable. But still most of the manufacturing fixtures are not foolproofed and this causes a major concern in the shop floor.

In most of the cases the fixtures do not have spare/replacement fixtures in case of a fixture failure. When an accident occurs due to the incorrect loading of workpiece, the loss will be heavy. Such occurrences can be prevented easily by foolproofing and such an investment can be easily justified.

In the automotive industry, the cost for building a fixture for a cylinder head is around $40,000 - $50,000 [6]. The cost involved for foolproofing such a fixture is relatively low and investment is justified as the reliability of the total manufacturing line is improved. A fixture failure not only adds a replacement burden, but also brings the total manufacturing setup to a halt imposing a heavy loss.

Foolproofing is fairly a simple concept that doesn't involve a high investment, but prevents accidents, improves equipment uptime and minimizes maintenance costs.

3.3 Fixture Foolproofing for Polygonal Parts

An algorithm was proposed in 1995 by Penev and Requicha from University of Southern California for Foolproofing polygonal parts in 2-D. This algorithm analyzes the solutions generated by an another algorithm created by Brost and Goldberg that finds all fixtures for a 2D polygonal part in a modular fixture with 3 fixed size locators and a clamp. Among those solutions the incorrect loading possibility is studied and foolproofing pins are added at the required location in a modular fixture. [12]

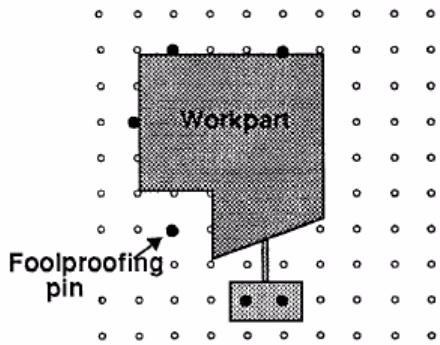

Figure 3.2 *Addition of foolproofing pin in the modular fixture to prevent incorrect loading [12]*

There are several limitations in the proposed algorithm.

- This algorithm works only on a valid solution generated from Brost-Goldberg algorithm. The algorithm by itself is not independent.
- The algorithm works only on polygonal parts, and does not accept curved edges. In a real case most of the parts have curved edges and this algorithm cannot be applied.
- The foolproofing is done by placing cylindrical pins at discrete set of possible locations in the modular fixture and the size of cylindrical pins are fixed.
- The algorithm works only on simple polygonal 2-D workpieces and does not accept 3-D geometry.

3.4 Algorithm for Foolproofing 3D parts

A new independent algorithm for 3-D parts that works based on the fixture design and part symmetry is proposed here. The main processes involved in this algorithm are,

1. Part classification based on Symmetry/Asymmetry
2. Determining the possible solutions
3. Part peeling/simplification - "Banana-Peel Algorithm"
4. Checking the foolproofing solutions
5. Solutions

The solutions are derived by undergoing a set of predefined set of procedures where the part is classified and later simplified based on the part geometry.

3.4.1 Part Classification

The parts are classified based on the symmetry across the x-y-z planes and similarity of surfaces in those parts. The parts are classified as,

1. Category - I (Symmetrical on all planes)
2. Category - II (Symmetrical along 2 planes)
3. Category - III (Symmetrical along 1 plane)
4. Category - IV (Asymmetrical)

Symmetry is defined as characteristic of certain geometric shapes (2D and 3D) that brings to mind patterns, tilings, and repetitive mirror-images. A figure or shape is symmetric if certain motions or rearrangements of its parts leave it unchanged as a whole. These motions or rearrangements are called Symmetry Transformations. A figure is symmetric if it is congruent to itself in more than one way.

For example, if a square is rotated about its center, no difference exists between the original figure and its rotated image. They coincide exactly. And if a horizontal line is

drawn through the center of a square, the top and bottom halves are mirror images of one another; the square is, therefore, symmetrical about this line. The other lines of symmetry are obvious and easy to find.

Here in the classification of 3-D parts we are concerned only about the mirror transformation about the mid planes in the x, y and z directions. The parts are classified by placing the part's primary locating surface in the Z direction and the secondary and tertiary locating surfaces in the x and y directions.

Category - I

Category - I parts are the parts that are symmetrical on all planes. Further these parts are sub classified based on similarity of features on adjacent sides and opposite sides.

Category I (a) - Symmetrical on all planes / opposite & adjacent sides same
Category I (b) - Symmetrical on all planes / opposite sides same (at least one)
Category I (c) - Symmetrical on all planes / adjacent sides same (at least one)

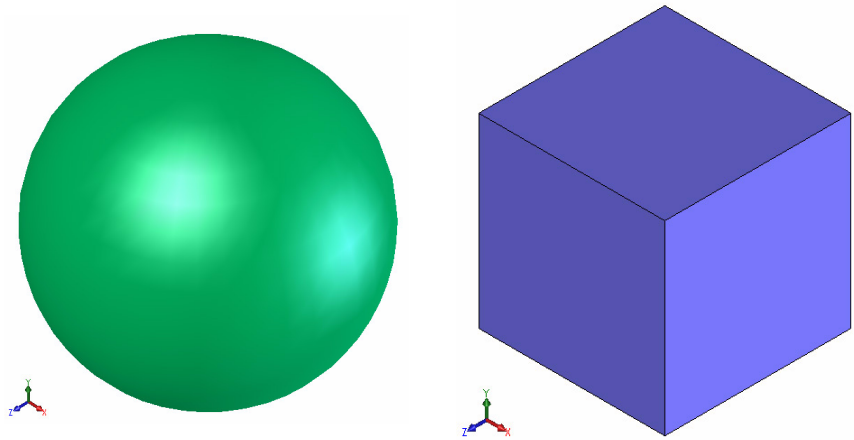

Figure 3.3 *Parts symmetrical around all planes and sides*

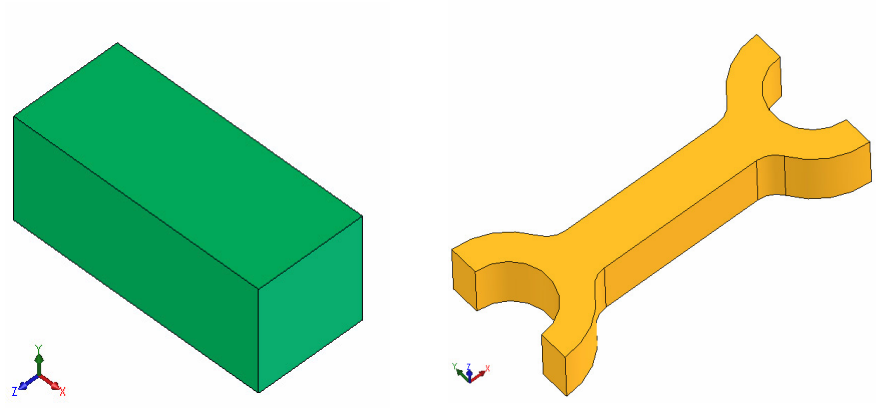

Figure 3.4 *Example parts for Category I(b)(left), Category I(c)(right)*

Category - II

Category - II parts are the parts that are symmetrical along two planes. Further these parts are sub classified based on the planes of symmetry (z/y, x/z, y/z) (here x plane is mentioned as all the planes lying in the x direction, same in y and z (Fig. 3.8))

Category II (a) - Symmetrical on x and y planes
Category II (b) - Symmetrical on x and z planes
Category II (c) - Symmetrical on y and z planes

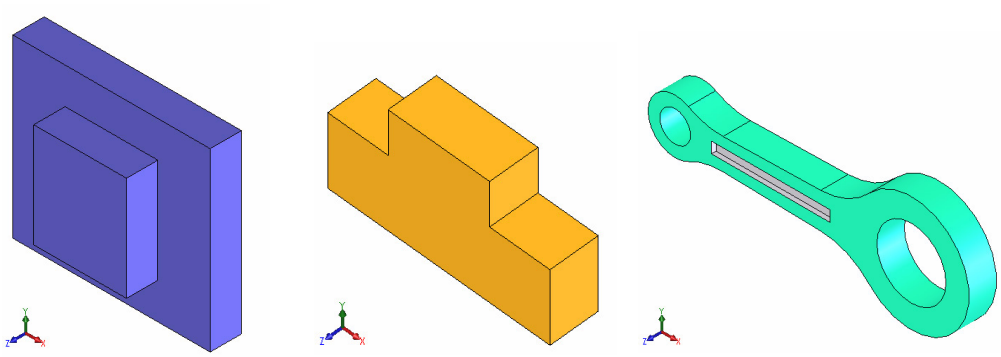

Figure 3.5 *Examples for Category II (a), (b), (c) (placed in order left to right)*

Category - III

Category - III parts are the parts that are symmetrical along one plane. Further these parts are sub classified based on the planes of symmetry (x, y & z) (here x plane is mentioned as all the planes lying in the x direction, same in y and z)

Category III (a) - Symmetrical on X plane
Category III (b) - Symmetrical on Y plane
Category III (c) - Symmetrical on Z plane

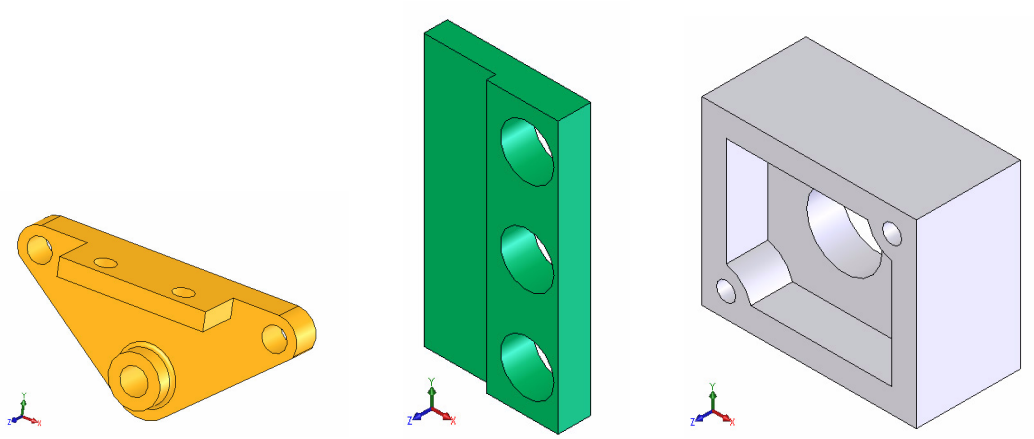

Figure 3.6 *Examples for Category III (a), (b), (c) (placed in order left to right)*

Category - IV

Category - IV parts are the parts that are asymmetrical.

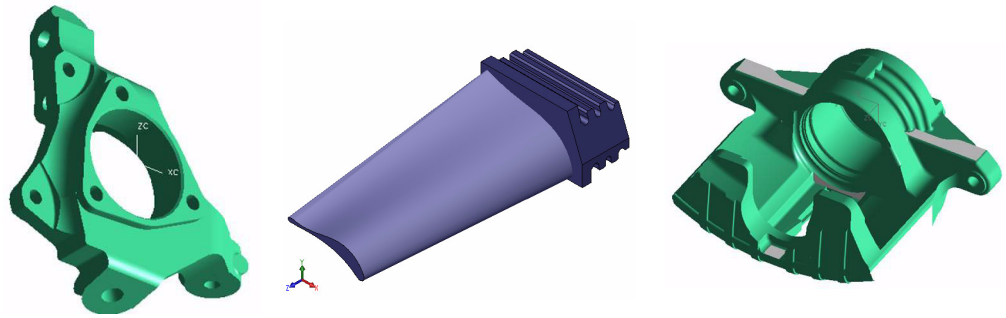

Figure 3.7 *Examples of asymmetrical parts*

Category IV (a) - All fixturing surfaces planar

Category IV (b) - All fixturing surfaces non-planar

Category IV (c) - Combination of planar/non-planar

The need for such a classification of the parts is to determine the various solution spaces that needs to be searched. The Category I & IV parts do not have any solutions for fool-proofing but there is a good scope for error proofing. (Error proofing is the verification of the proper contact of the part with the locators.) Category II & III parts are best suitable for foolproofing.

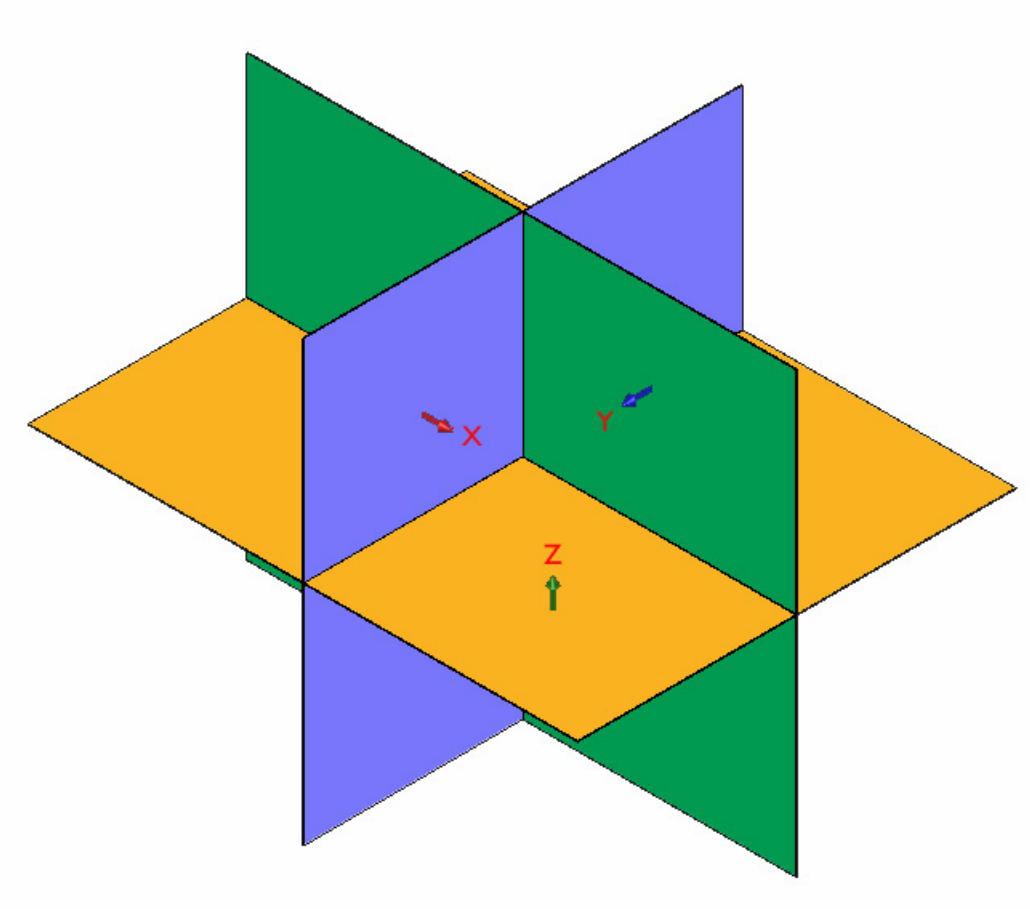

Figure 3.8 *The various planes under consideration and their naming conventions*

Part Classification Algorithm

An algorithm is created to determine the Category of the part. The initial process is to properly align the model in CAD software so that the axes are aligned with the fixturing.

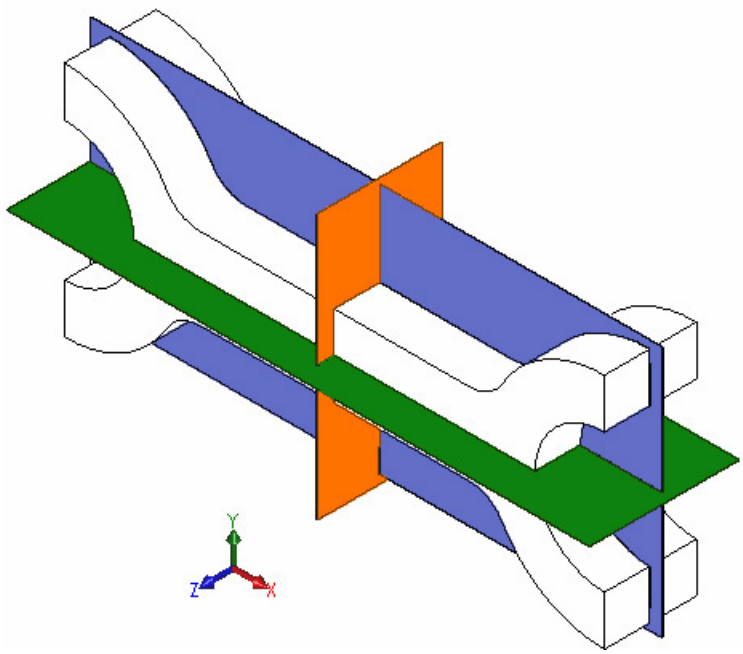

Figure 3.9 *Mid surfaces generated based on part boundary*

datums. The primary locating surface is the z plane and the secondary and tertiary locating surfaces being x and y planes. The mid surfaces are generated using the standard Application Programming Interface (API) functions inside the CAD software. This is done based on the part boundary in all three dimensions. (Fig. 3.9)

Once the mid surfaces are generated the part is split at the mid surfaces on the various planes one at a time and subjected to symmetry transformations. The only transformations that are considered here are the mirror transformations.

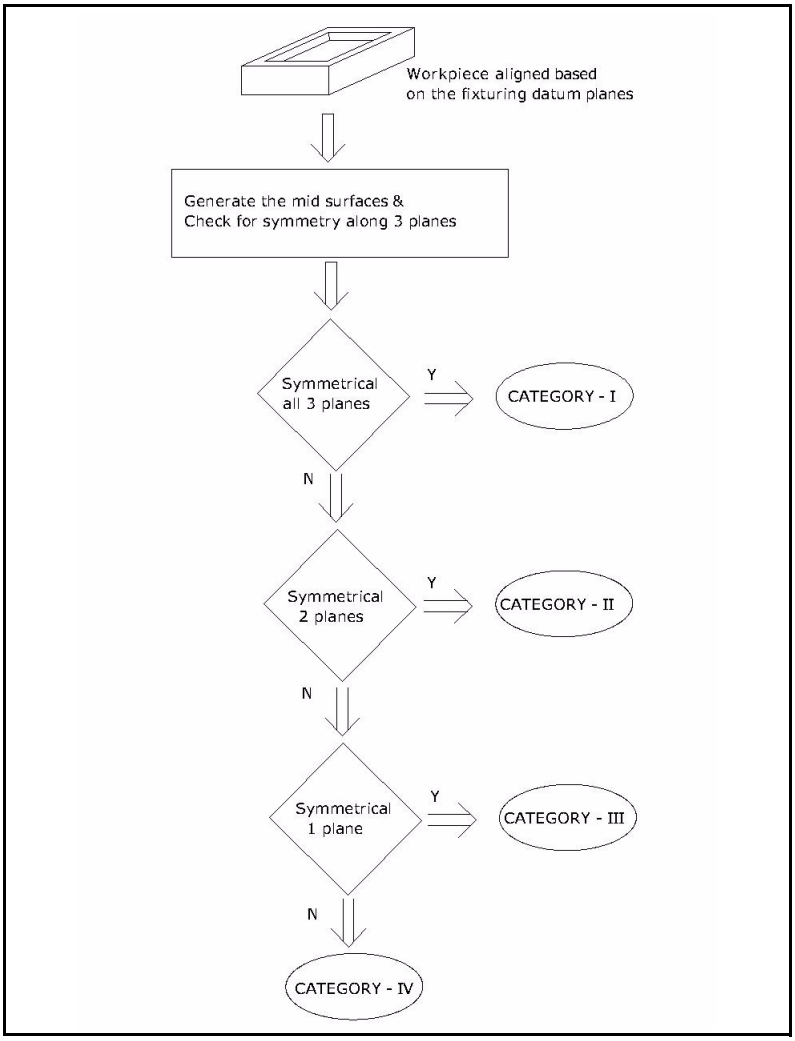

Figure 3.10 *Flow chart for part classification*

Based on the symmetrical results the part is classified in the subsequent category. A flow chart for determining the categories is illustrated in Fig. 3.10

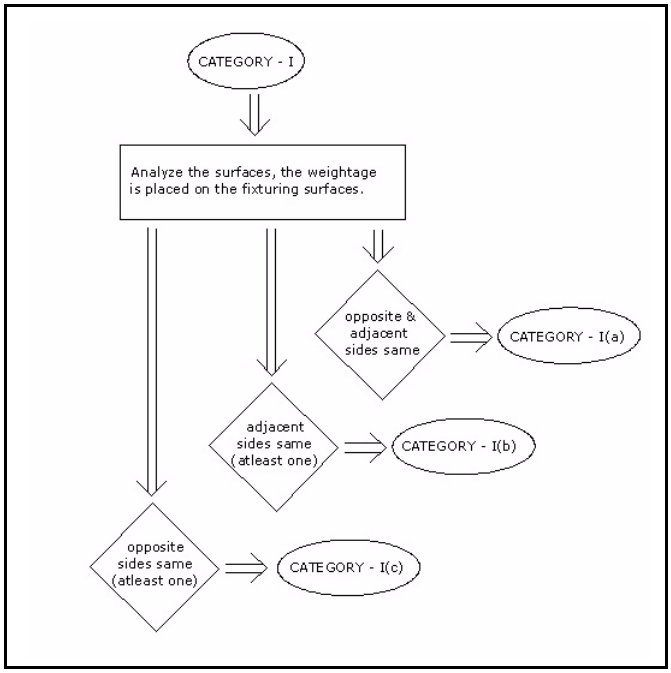

Figure 3.11 *Flow chart for Category I - Sub classification*

Once the various categories are determined the sub category classification is done based on a set of rules. The primary fixturing surface is compared with the adjacent and opposite surfaces for similarity. If all the surfaces are same it is classified as Category I(a). Later the same procedure is repeated based on the secondary and tertiary locating surfaces. A detailed flow chart illustrating the classification procedure is shown in Fig. 3.11. Similarly the category II parts are classified based on the pair of planes in with they are symmetrical, a detailed flow chart illustrating the process is shown in Fig. 3.12.

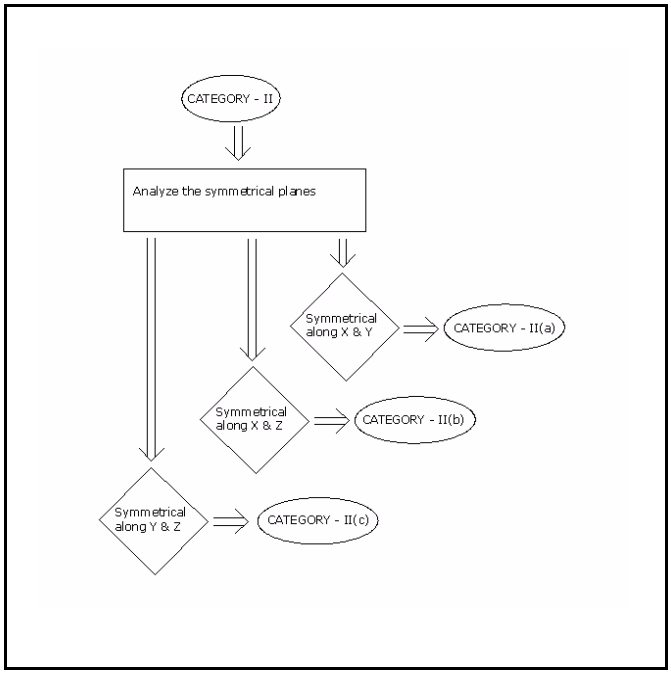

Figure 3.12 *Flow chart for Category II - Sub classification*

The Category III parts are sub classified again based on plane of symmetry, similar to Category II classification but only one plane is considered. The Category IV parts are the classified based on the fixturing surfaces. The fixturing surfaces are analyzed to check whether they are planar / non-planar or a combination of both. A flow chart showing the sub classification is shown in the Fig. 3.12

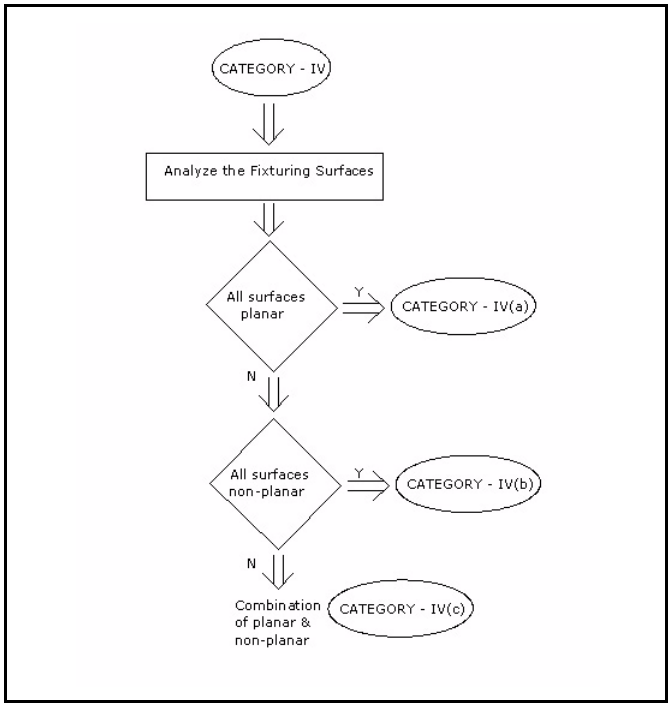

Figure 3.13 *Flow chart for category IV -Sub classification*

Error Proofing

Error proofing is similar to foolproofing. Error proofing is the verification of the contact of workpiece with all the locators before any value is added to the workpiece. Error proofing is studied in detail for a special application involving free form surfaces in Chapter 4.

3.4.2 Determining the possible solutions

The necessity to have the parts classified as discussed earlier is to determine the solution spaces to search. As we are involved in a 3-D domain, it is a complex problem to search all solutions in space. So this process simplifies and categorizes the problem so we can have an individual and more specific conditions tailored for specific cases. Once we finish classifying the parts we determine the possible solution spaces. The solution spaces are classified into two domains as Fool proofing and Error proofing. The foolproofing is sub divided as pin based solution and sensor based solutions. A table showing the various solution spaces for the different category of parts is shown in Table. 3.1. As shown in the Table 3.1 Category I(a) and Category IV(a) do not have any solutions for neither fool-proofing nor error-proofing because, the Category I(a) parts are highly symmetrical and hence no solutions exist and Category IV(a) parts are complex with planar surfaces.

TABLE 3.1 Possible solution spaces for further search

		Foolproofing		**Error proofing**
		Pin Based	**Sensor based**	**Sensor based**
Category I	(a)			
	(b)		x	
	(c)		x	
Category II	(a)	x	x	
	(b)	x	x	
	(c)	x	x	
Category III	(a)		x	
	(b)		x	
	(c)		x	
Category IV	(a)			
	(b)			x
	(c)			x

Once this process is over we know whether there exists a possible solution or not. This guiding process is determined based on the current available sensor technology and the constraints involved using them. This is just process that guides us towards the solution and cannot be assumed that there is a definite solution.

3.4.3 Part peeling / simplification - "Banana-Peel Algorithm"

Once it is determined whether there is a possible solution for a given problem we go further investigating those solutions. Our goal here is to simplify the 3-D part further into a set of 2-D sketches and search for solutions.

Banana-Peel Algorithm

As the name suggests the part is peeled like a peel of a banana for part simplification. This is an interesting process, we peel the part based on the parts workholding fixture. The fixture we are considering is a traditional 3-2-1 type. The initial surface we start with is the primary locating surface and this surface forms the base and the peeling process starts with the peeling of the secondary locating surface here all the external surfaces in the direction of secondary locating surface are also peeled along. Next the same process is repeated for the tertiary locating surface. An example with a pictorial illustration of this process is shown in Fig. 3.14

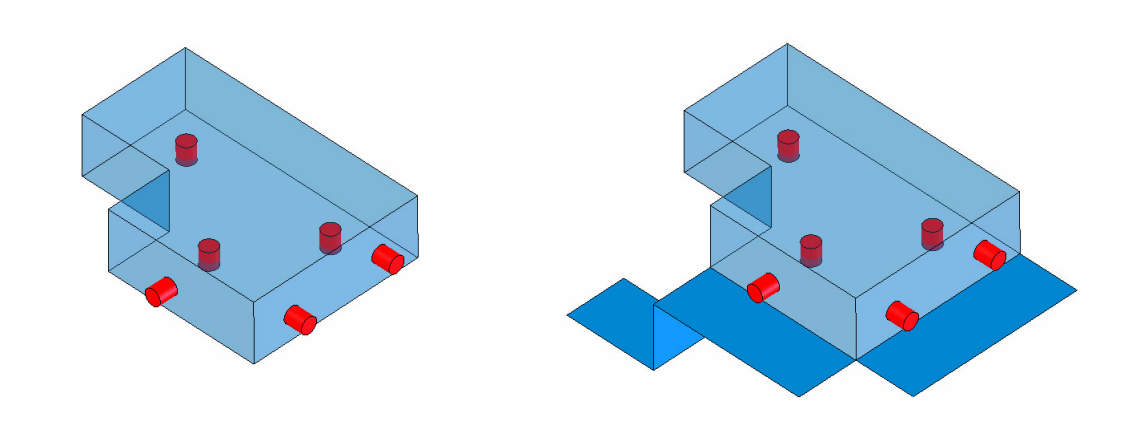

Figure 3.14 *Illustration of part peeling process.*

As it is shown in the Fig. 3.14 we may have more than one surface for every locating direction, in this case we have multiple faces in the tertiary locating direction.

After this process we generate two simplified representations from the existing peeled part. The first representation is the simplified projection of the peeled-part on a plane (Fig 3.15), this results in a 2-D sketch.

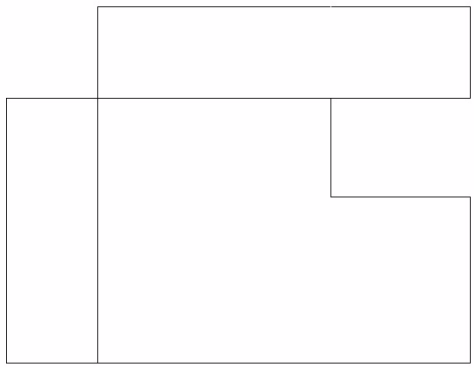

Figure 3.15 *Part representation after projection*

The next representation is the same peeled-part with part eliminated (Fig. 3.16). This results in sketches in multiple planes based on the input part.

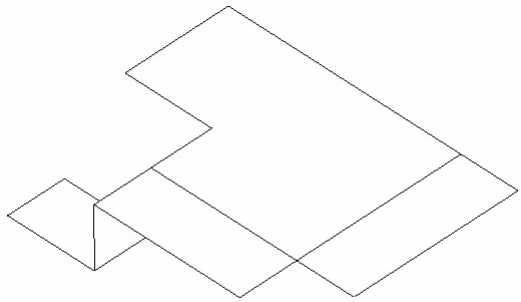

Figure 3.16 *Part representation after eliminating the actual part*

3.4.4 Generating the foolproofing solutions

Once we have the simplified part representation we can search the geometry for a solution. This process is divided into several steps. The first step is to utilize the projected part representation and perform symmetry transformations on that part and check for the solutions. Later the same process is repeated over the actual peeled part.

Symmetry Transformations

Mathematically described motions or rearrangements of a geometric shape or its parts that leave the shape unchanged, including rotation, reflection, and inversion. For any symmetric figure, certain sets of points, lines, or planes are fixed, or invariant, under a symmetry transformation.

We do some symmetry transformations on our part's simplified geometry to figure out the foolproofing solutions. Although there are a lot of transformations exist we are concerned only with a few basic transformations. The most common symmetry transformation is the rotation. As an example, we can rotate a cube by 90 degrees about a straight line crossing the middle of two opposite faces. The cube before and after the transformation cannot be distinguished. Another common symmetry operation is the reflection, also called mirror symmetry. We are concerned with 8 different symmetry transformations and those transformations are explained in Fig. 3.17

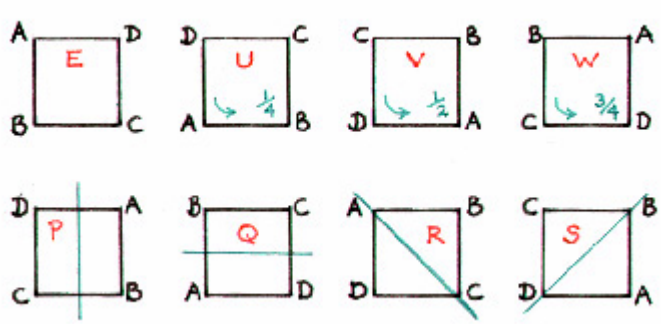

Figure 3.17 *The 8 symmetry transformations for foolproofing solution*

The various transformations shown in Fig. 3.17 are explained here,

The first four transformations are rotation transformations.

- E - E is called the identity. This is our part without any transformations
- U - This rotates the square through a quarter turn (90 degrees).
- V - This rotates the square through a half turn (180 degrees).
- W - This rotates the square through a three-quarters turn (270 degrees).

The next four transformations are mirror transformations.

- P - This reflects about a vertical mirror line through the centre.
- Q - This reflects about a horizontal mirror line through the centre.
- R - This reflects about a diagonal mirror line through AC.
- S - This reflects about a diagonal mirror line through BD.

We perform these transformations on our part and fill the table as shown in Table 3.2 with 1 if a symmetry is found and 0 if asymmetrical. And the row and columns totals are calcu-

TABLE 3.2 Symmetry table

	U	**V**	**W**	**P**	**Q**	**R**	**S**	**Total**
Primary								
Secondary								
Tertiary								
Total								

lated. The row the least total suggests that the probability for a solution is the highest in that plane. A sample calculation is shown from our example part in Table 3.3

TABLE 3.3 Symmetry table - Sample Calculation (Refer Fig. 3.15)

	U	V	W	P	Q	R	S	Total
Primary	0	0	0	0	0	0	0	0
Secondary	0	1	0	1	1	1	1	5
Tertiary	0	1	0	1	1	1	1	5
Total	0	2	0	2	2	2	2	

In this case from the solutions we can expect a solution lying in the Primary locating plane. Now we need to determine where to place the foolproofing pin/sensor. We utilize the transformations P,Q, R and S to determine the solution. The area from our initial identity case "E" is added with the transformed areas and the resulting new area is saved. The solution lies in the common region intersected by all the transformations and that is the location for foolproofing pin/sensor. An illustration is shown is Fig.3.18

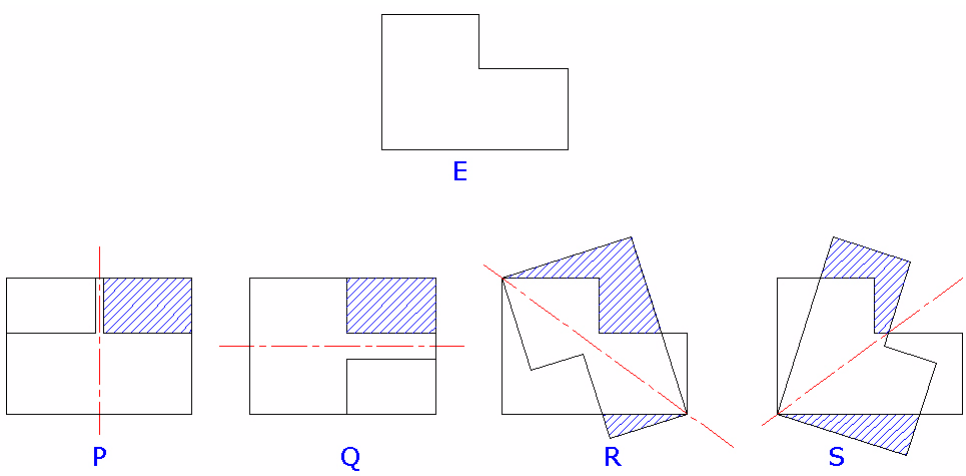

Figure 3.18 *Symmetry transformations P,Q,R and S on the sample part*

The same steps can be used to process the another representation we have on multi planes, the only difference in using the other representation is we move into the 3D space and we

will be dealing with some simple 3-D geometry depending on the input case. The 3-D case is not investigated further but the same algorithm is expected to generalize with a few minor modifications.

3.4.5 Validating the Solutions

Once we determine the location for the foolproofing pin, the size for the pine is determined and it is placed in the fixture assembly and the assembly is checked for collisions with other fixture elements and interferences with other operations like tool paths and fixture accessibility.

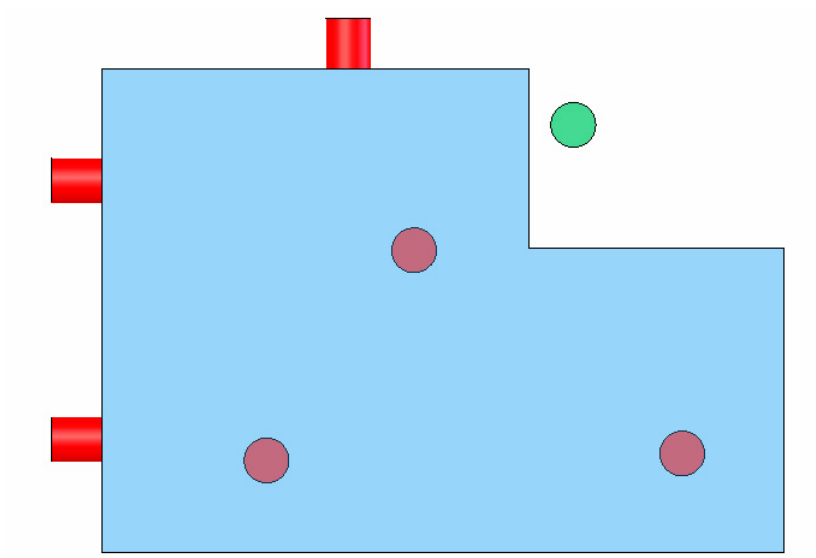

Figure 3.19 *The final foolproofing solution*

Initially a simple foolproofing pin is selected for all solutions and the solutions are validated. If a problem is found the foolproofing pin is replaced with a sensor based alternative and the solutions are validated again. The sensor based solutions are discussed in detail later in Chapter 5.

3.5 Conclusions

An unique 3-D fixture based algorithm has been developed for foolproofing parts. Also a new generation in foolproofing with the use of sensors is introduced. The algorithm can be applied to the existing fixture designs and the existence of a foolproofing solution could be found. The foolproofing greatly improves the manufacturing system reliability by preventing accidents and increasing the equipment uptime. Foolproofing fixtures will prevent defects or non conformities that fallible human beings would otherwise make through inadvertence.

3.6 Limitations

The current foolproofing algorithm works only for the 3-2-1 based locating schemes, the other locating schemes need to be considered. The algorithm has to be expanded in detail for the part representation in 3-D planes to search for the solutions in 3-D space. Current algorithm only searches for the solutions in the 3 locating directions, the features that are present in the surfaces other than locating could be utilized for foolproofing.

Chapter 4

PART LOCATION - CONTACT VERIFICATION

4.1 Introduction

The workholding of parts with free form surfaces involve complex fixturing. Especially in the aerospace industries where a lot of complex surfaces are involved the fixturing becomes a challenge. The turbine blades and vanes are the parts that pose a real problem. Turbine blades are rotating members in a jet engine and turbine vanes are stationary members that manage gas flow in a jet engine (Fig. 4.1). Turbine blades and vanes are made out of tough alloys and one of the widely used alloy is Inconel, this makes the part difficult to machine. The blade and vane castings cost around $2,000 to $5,000 each [5]. Once the blades and vanes are cast, the preferred methods for machining the features is either Grinding or Electrical Discharge Machining (EDM) The fixtures we are interested here are ones involved in these special cases.

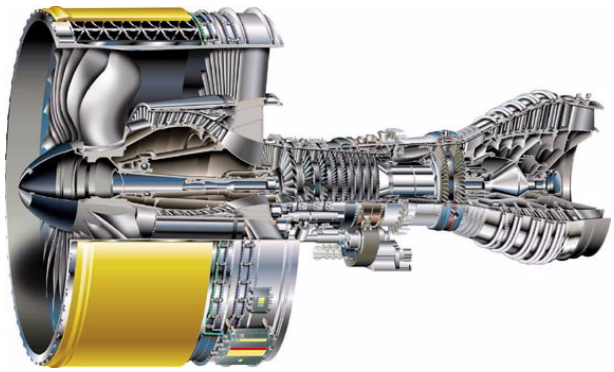

Figure 4.1 *A cross-sectional view of a jet engine showing blades and vanes.*

The features that are normally ground in the blade include fir trees or dove tails, which are in turn used to mount the blades in the jet engines. The workholding is critical for these parts because all surface tolerances must be +/-0.0006 inches in relation to each other [5]. Tolerances on turbine vanes aren't as tight as with blades. However, they involve complex part shapes and fixturing surfaces.

The current popular fixturing technique used for these parts is encapsulation. Encapsulation is an expensive method in which a low-melt zinc alloy is cast over the part. This casting contains the datum points worked off of during the grinding process, and once that's complete, the encapsulation material is melted off. However, the alloy contains heavy metals, and any trace amounts left on the part can ruin it and cause a weak spot. So strong chemicals are used to thoroughly clean parts.

Other common fixturing technique is to grind one end of the blade and use it for holding and locating. This works for short blades, but when they are longer, there is a more chance for part vibration [5].

Another way to fixture is to hold and locate using the blade section itself, which involves a complex fixture and some fixturing problems. The most common fixturing problem in these fixtures is non-contact of the blade/vane surface with the locators in the fixture. So we need a mechanism to verify the proper location of the workpiece in the fixture before we can add further value to the product. In this research various techniques to accomplish this task are proposed and an experimental test fixture is built to validate those claims and the results are studied.

4.2 Problem Description

As explained earlier the fixturing of free-form surfaces is a challenging task and the fixtures involved in workholding are complex. These kinds of special surfaces are encountered often in aerospace components like turbine blades and vanes. The typical fixturing surfaces encountered are shown in Fig. 4.2 and 4.3. As the surfaces are free-form locators are designed spherical for achieving a point contact and to minimize fixturing variation.

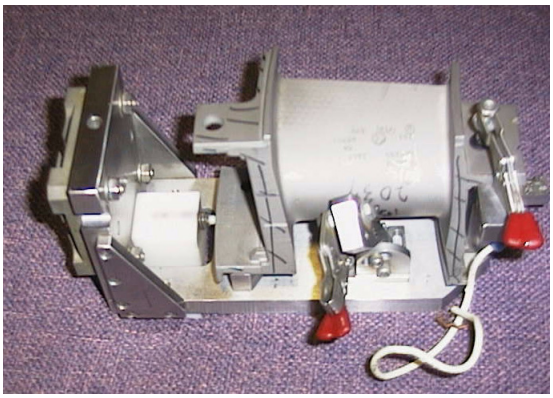

Figure 4.2 *A picture of turbine vane in its fixture*

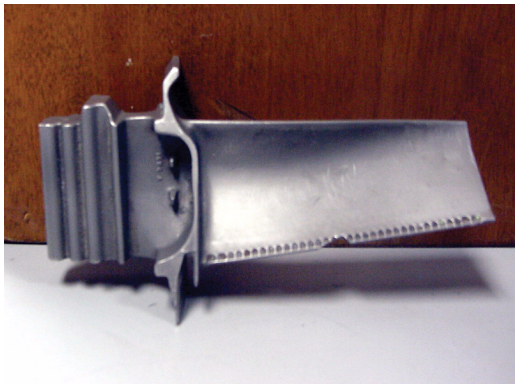

Figure 4.3 *A picture of complex surface of a blade*

These spherical locators are used to locate the datum surfaces of the vane/blade, which in this case is a free form surface. The common 3-2-1 locating scheme is used to locate the workpiece in this fixture. The locating accuracy is critical and has high tolerances, in this case for the fixture in Fig. 4.2 is less than 0.0004 inches. This workpiece in the fixture is machined using a 5-axis Wire-EDM machine. As the EDM environment is corrosive in nature locators are made of ceramic to prevent the locators and to hold high fixturing tolerances. An actual fixture with the ceramic locators is shown Fig. 4.4. To prevent excessive oxidation the workpiece is fully submerged along with the fixture in the dielectric fluid during the machining. The main problem faced by the industry using these fixtures is the inaccurate location.

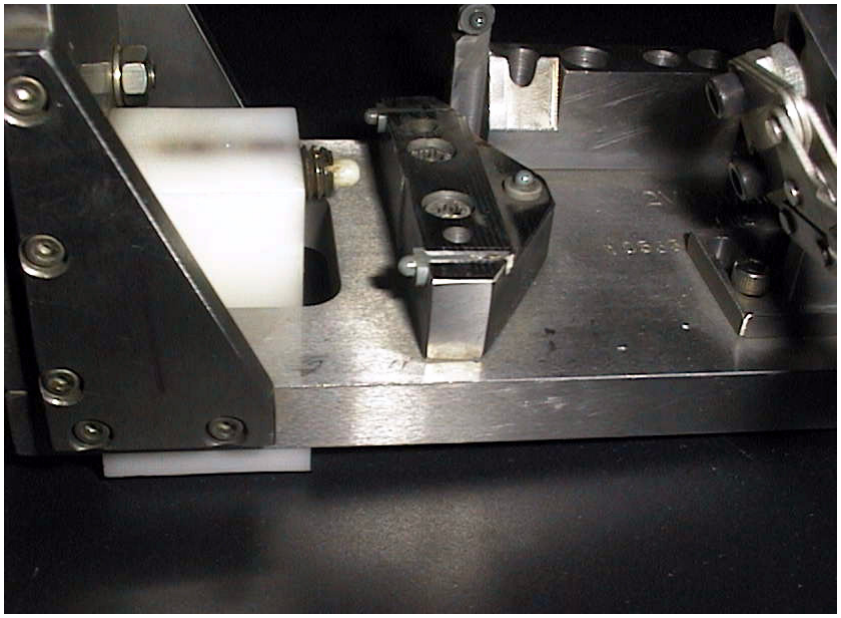

Figure 4.4 *The ceramic locators in the fixture*

One of the main causes for locating inaccuracy is non-contact of workpiece with locators. This occurs due to a misalignment or improper clamping forces. It is difficult to position the clamping surfaces at right location and let them exert the clamping forces in the right direction as the clamping surfaces too is free-form. So there are a few possibilities, the workpiece could be clamped before it was in contact with all locators or the workpiece looses contact with one or more locators after the clamping. A simplified fixture-workpiece figure illustrating a the non-contact of locators with the workpiece is shown in Fig. 4.5.

As free-form surfaces are involved as fixturing surfaces we cannot ignore a possibility that there can be multiple solutions for the given fixture-workpiece design. What is meant by multiple solutions here is, the workpiece can be loaded in the fixture in a number of different ways still maintaining contact with all locators. This may seem a little fictitious but still there is a possibility for such an occurrence. An illustration is shown in Fig. 4.6 for such a case in the real time.

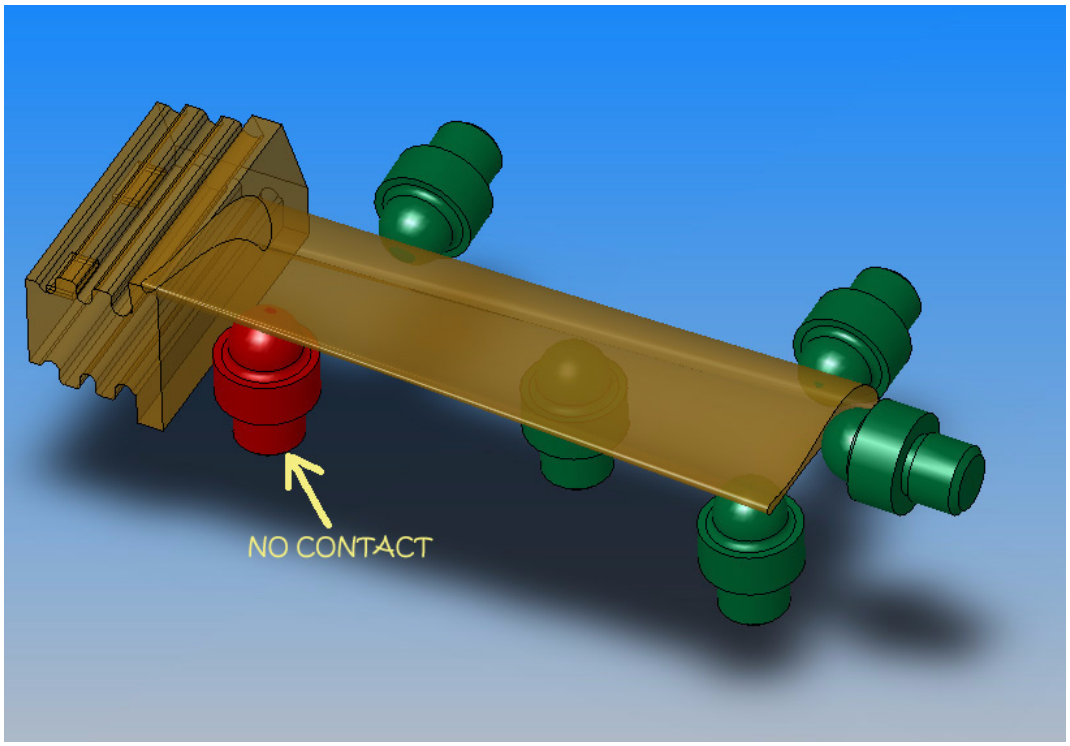

Figure 4.5 *Simplified fixture-workpiece illustration of non-contact of locator with the workpiece during fixturing*

Although the case discussed in the Fig 4.6 is not a perfect case in real time but a simplified version of that will be, a part having same radius of curvature along the different locating regions and this kind of occurrence is very much possible and we need to avoid this type of problems.

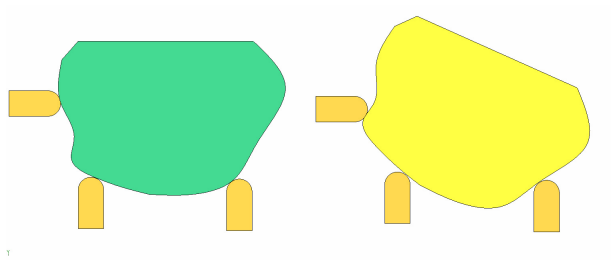

Figure 4.6 *An example of different workpiece poses in fixture while maintaining contact with locators*

4.3 Sensor based solutions

With a lot of progress in the sensing technologies in the recent years, one of the possibilities explored here is to place sensors in the fixture to verify the proper location of the workpiece. Various sensors were studied and one of the main limitations were the space available to install those sensors. As the locators were tiny (Diameter around 0.125 inches), we narrowed our search to a group of sensors that could be installed inside the ceramic locators. One of the most promising sensors we found was the fiber optic sensors (Fig. 4.7)

Figure 4.7 *Pictures of a few fiber optic sensors*

Another reason we liked these sensors is the ability of these sensors to operate under rugged environment, with an IP-67 class rating these sensors had ability to work under those conditions, especially in the EDM environment.

Various designs were made based on sensors and applications. The sensors would be placed inside the locators away from the contact locations at different places in the fixture to verify the proper location.

4.4 Optimization of Sensor location

Once we determined the solutions another great challenge was to figure out where to place those sensors and how many sensors we need to operate optimally. As the surfaces were complex, the problem was decomposed into a 2-D case and the sensor placement was analyzed. An illustration is showed in Fig. 4.8 of the various possible cases that has to be considered to determine the optimum solution. As shown in the figure the Ideal case is when the workpiece is in contact with both the locators. The Case - 1 is when the contact is lost

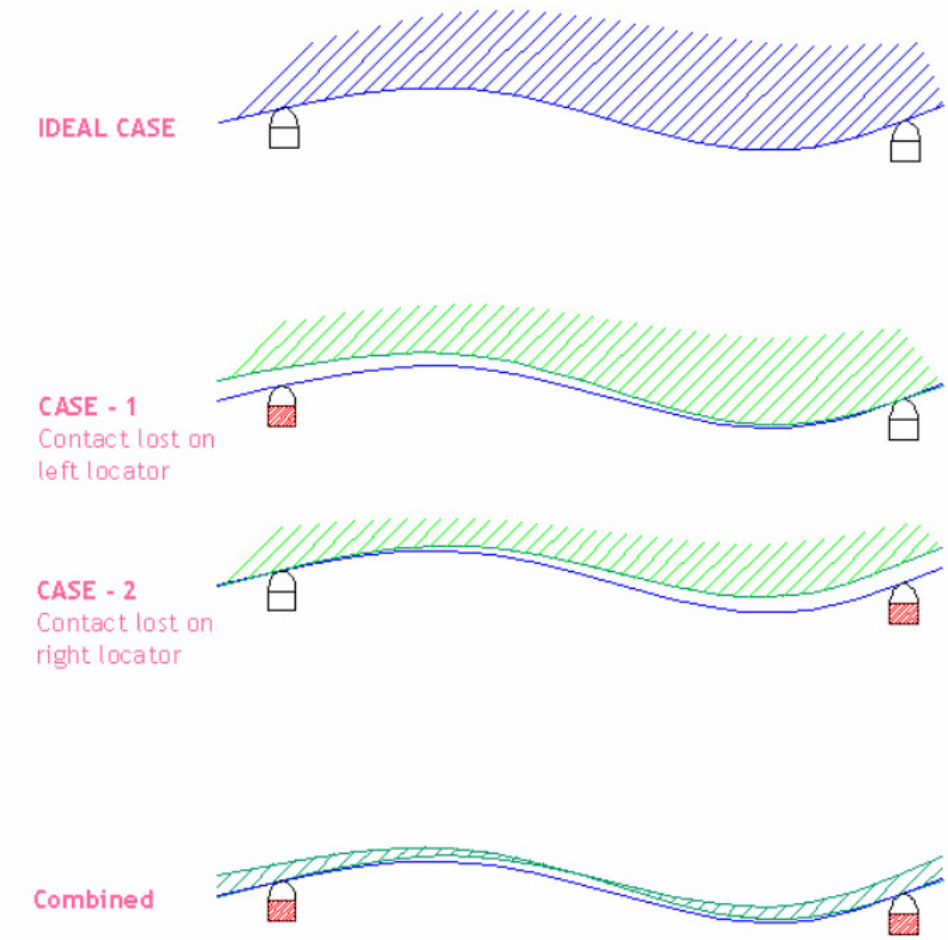

Figure 4.8 *2-D graphical representation of different cases*

with the left locator and the Case - 2 is when the contact is lost with the right locator. A combined case is also illustrated for optimization purposes in which the contact is lost with both the locators. The problem is further simplified to mathematically represent the problem as shown in Fig. 4.9

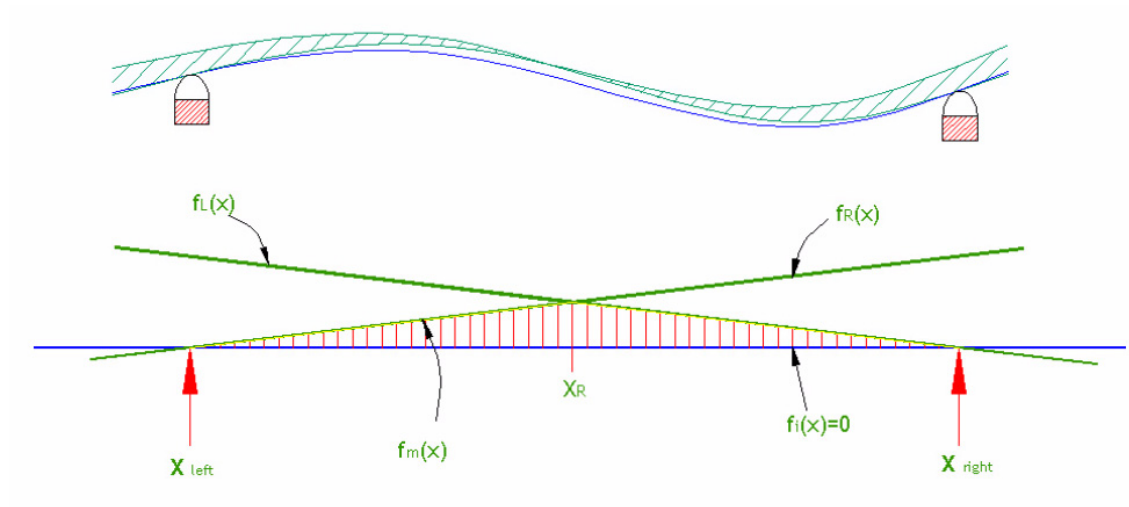

Figure 4.9 *Mathematical representation of the different cases*

The various cases are mathematically represented as,

$f_M(x)$ = Ideal case

$f_L(x)$ = Case - 1(Left)

$f_R(x)$ = Case - 2 (Right)

$f_M(x)$ = Combined case (need to be computed)

$$f_M(x) = min(f_L(x) - f_i(x), f_R(x) - f_i(x))$$

we find all values of X_R satisfying two conditions,

$$\frac{df_M(x)}{dx} = 0, \quad \left.\frac{d^2 f_M(x)}{dx^2}\right|_{X_R} < 0$$

$f_M(x_R)$ for all values of X_R are computed.

Once we compute $f_M(x_R)$ we have the profile of the curve we need to work on to place the sensors. The problem is simplified with the use of the CAD software to do the computations. The problem is defined in an assembly and the different cases are defined and the software generates the combined case by performing the union operations on the geometry. The results from the CAD software after the transformations were used in the sensor location optimization.

As you can see from Fig. 4.9 the best results can be obtained by using a sensor at each locator and the use of fewer number of sensors will involve complex calculations to determine the locations for those sensors and are not considered in this research. With the decision made on the number of sensors and locations for the sensor the fixture design is further investigated.

4.5 New design approach for sensor based fixtures

The traditional fixture design principles follow a lot of rules for the locator positioning. Few rules state that Locators should be positioned so they can repeat the same location part after part. Whenever possible, the locators should be positioned as far apart as possible. The part shown in Fig. 4.10 shows this principle. This reduces the part variation due to locating errors and improves the locational stability.

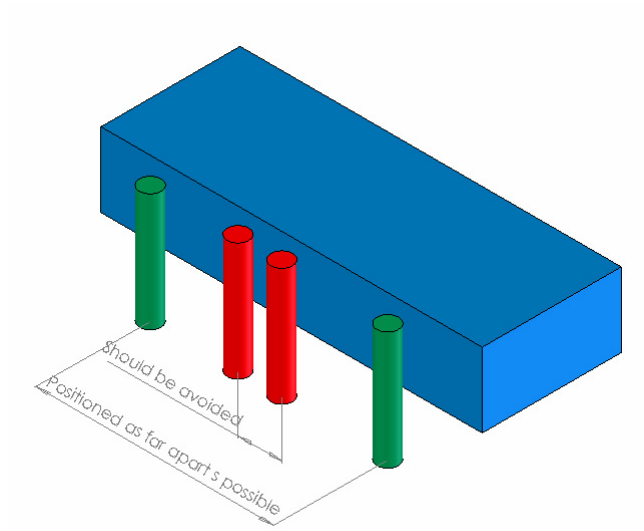

Figure 4.10 *Positioning the locators as far apart as possible for maximum accuracy and locational stability*

But these principles and various others followed in the traditional fixture design cannot be followed here because we have got a problem in the fixturing repeatability. So we are designing new rules for positioning the locators in the sensor based fixtures that will improve fixture repeatability.

One of the major concern here is where is the best position for the locators. Since the locators here are smart with the addition of the sensors that are embedded in them we need to consider the advantages of sensors and utilize those advantages to our benefit.

Sensor Location and its sensitivity to Curvatures

One of the features in fixturing free-form surfaces is, it has various radius of curvatures along the fixturing the surface and this is the main problem that's causing non contact with locators. But when we use the sensor based locators the curvatures can be used to our advantage. As the sensors are very sensitive to change in radius of curvature this change can be utilized to get the maximum sensor output for detecting the locating errors.

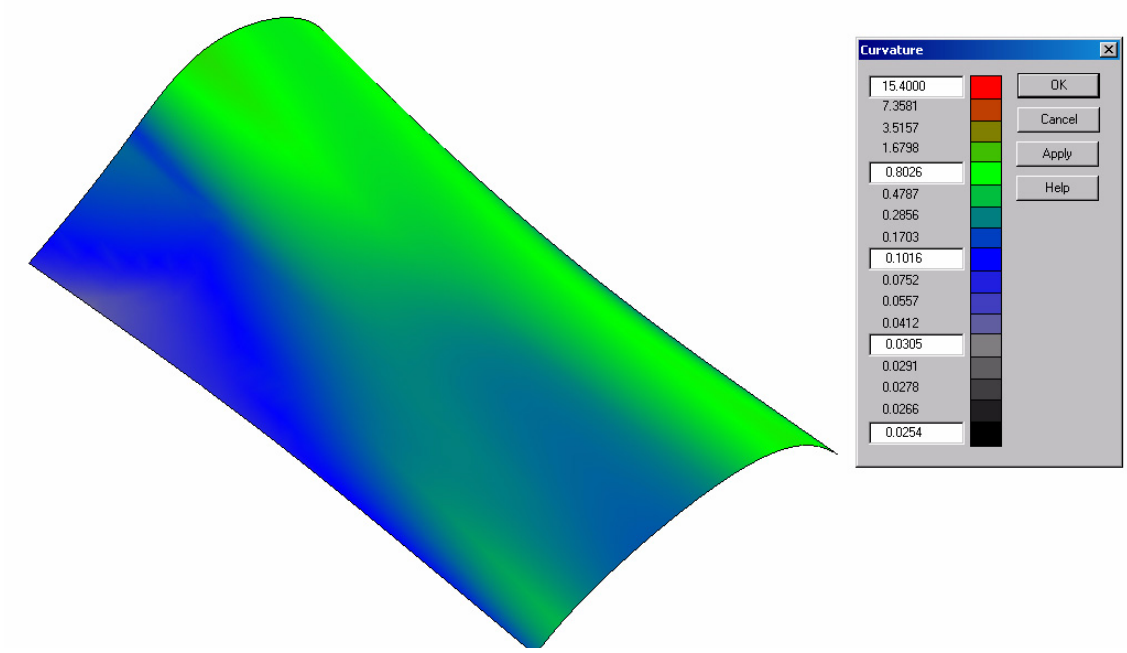

Figure 4.11 *The plot showing the surface curvature (Inset table shows the radius of curvature and the corresponding colors - units are in inches)*

Fig. 4.11 shows the colors associated with the curvature of our test workpiece. Curvature is equal to the inverse of the radius of the curve (curvature = 1/radius of curvature). The greatest curvature is represented by red, and the least curvature is represented by black. As the curvature increases (and the radius decreases), the corresponding color values change from black, through blue, green, and red. (If we tried to display curvature on a cube, all sides will be displayed as black. This is because the radii of flat faces are infinite and the curvature is zero.)

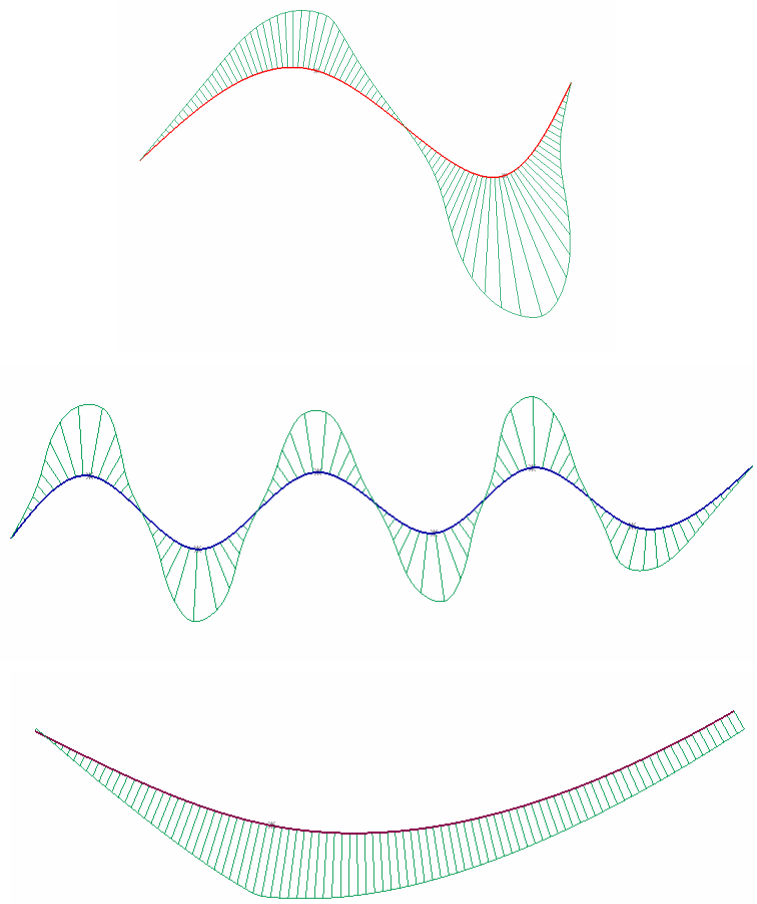

Figure 4.12 *Example of curvature plots for the curves extracted from different cross sections*

Curvature and Radius of Curvature [24]

The radius of curvature is given by,

$$R \equiv \frac{1}{\kappa}$$

where κ is the curvature. At a given point on a curve, R is the radius of the osculating circle.

Let x and y be given parametrically by,

$$x = x(t)$$
$$y = y(t)$$

then,

$$R = \frac{(x'^2 + y'^2)^{3/2}}{x'y'' - y'x''}$$

where $x' = \frac{dx}{dt}$ and $y' = \frac{dy}{dt}$. Similarly, if the curve is written in the form $y = f(x)$, then the radius of curvature is given by

$$R = \frac{\left[1 + \left(\frac{dy}{dx}\right)^2\right]^{3/2}}{\frac{d^2y}{dx^2}}$$

Similarly for a two-dimensional curve written in the form $y = f(x)$, the equation of curvature becomes

$$\kappa = \frac{\frac{d^2y}{dx^2}}{\left[1 + \left(\frac{dy}{dx}\right)^2\right]^{3/2}}$$

The curvature at a point on a surface takes on a variety of values as the plane through the normal varies. As κ varies, it achieves a minimum and a maximum (which are in the perpendicular directions).

Osculating Circle [24]

The circle which shares the same tangent as a curve at a given point is called an osculating circle. Given a plane curve with parametric equations $(f(t), g(t))$ and parameterized by a variable *t,* radius of curvature of the osculating circle is

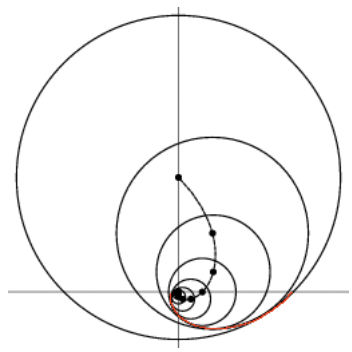

$$\rho(t) = \frac{1}{|\kappa(t)|}$$

where $\kappa(t)$ is the curvature, and the center is

$$x = f - \frac{(f'^2 + g'^2)g'}{f'g'' - f''g'}$$

$$y = g + \frac{(f'^2 + g'^2)f'}{f'g'' - f''g'}$$

Here, derivatives are taken with respect to the parameter *t.* Note that the centers of the osculating circles to a curve form the evolute to that curve.

The design technique proposed for the sensor based locators for free-form surfaces is to place the locators at location where the rate of change in the radius of curvature is maximum, so that any error in the workpiece on fixture will give maximum output for the sensor. To achieve this we need to plot the radius of curvature along the cross section of the surface in both X and Y direction

The common functions in the CAD modelling software is used to get the various parallel cross sections at constant intervals along X and Y planes and the splines extracted are used to plot the radius of curvatures and the rated of change of radius of curvatures to find the best locations. In some cases we get all the results too close to each other making an impossible solution, so we mark the regions in the surface for searching the rate of change of radius of curvature. In case of a primary locating surface there will be three marked regions for one locator each and those areas are searched for the best locations.

4.6 Test Fixture Design

An experimental fixture was designed to demonstrate the technology and the feasibility for such a solution. The main functional requirements for the device was,

- Should accept workpieces with different surface geometries and sizes
- Should provide means to position locators and sensors at different locations
- Locators and sensors should be interchangeable in the fixture
- Locators should accommodate the different sensors
- Should replicate the current fixture in use in the industry

With these functional requirements in mind a test fixture was designed. One of the important goals was to build the fixture close to the current industry fixture so the solutions can be easily integrated into the existing fixtures. The locator was designed to replicate the

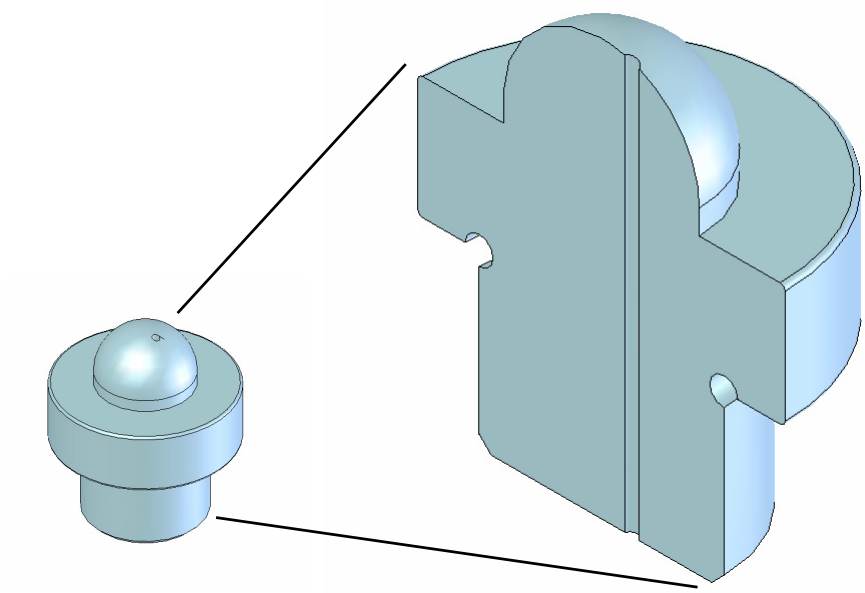

Figure 4.13 *The graphical illustration of locator design with through hole for the sensor*

current ceramic locators widely used in the industry. The locator was machined out of aluminum and holes were drilled on the locators to accommodate the sensors on them. Each locator had different size holes to accommodate various sensors and they were drilled at different locations to study their effects.

The part that holds the locator was designed so that it can slide and gives the flexibility to make adjustments depending on the surface being located. The figure 4.14 shows the

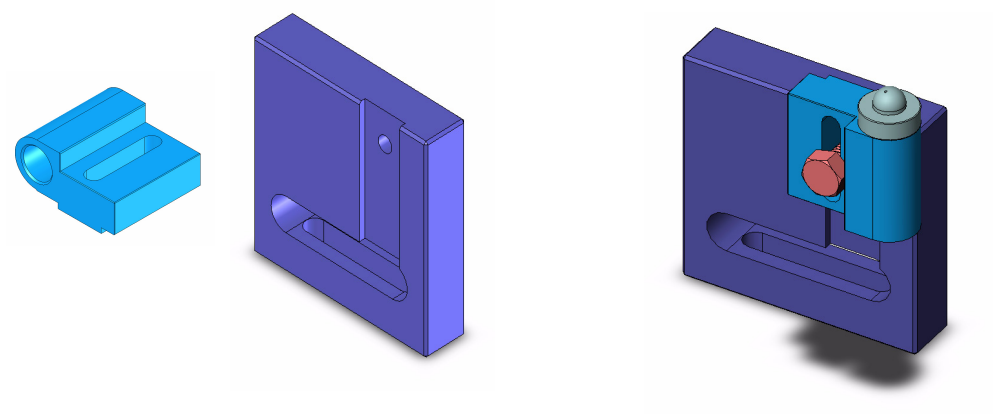

Figure 4.14 *Locator holder and vertical support and the assembled view for the test fixture*

locator holder on the left and the vertical support member on the right. The vertical support member was also made adjustable in the linear direction by allowing it to slide on the base elements shown in Fig. 4.15. There were two different base elements designed for

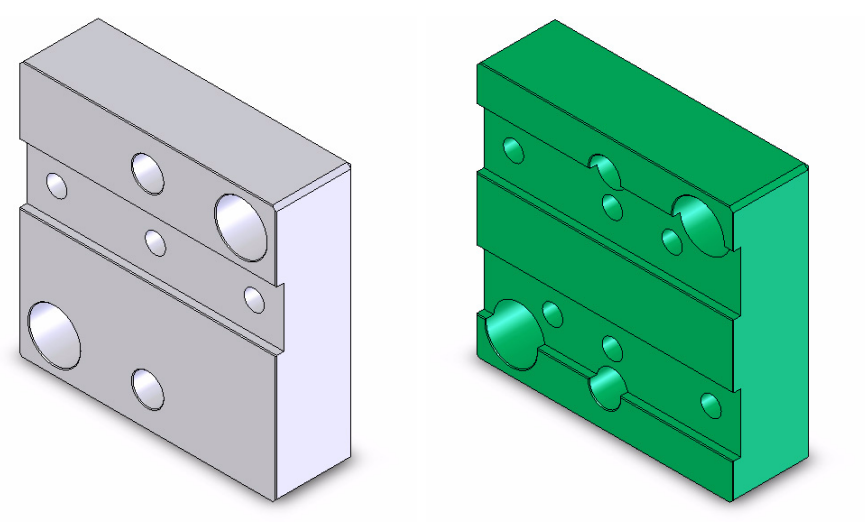

Figure 4.15 *The two different base elements for the test fixture*

the fixture. The assemblies for the primary locating surface is shown in Fig. 4.16 and the assemblies for secondary and tertiary locating is shown in Fig. 4.17.

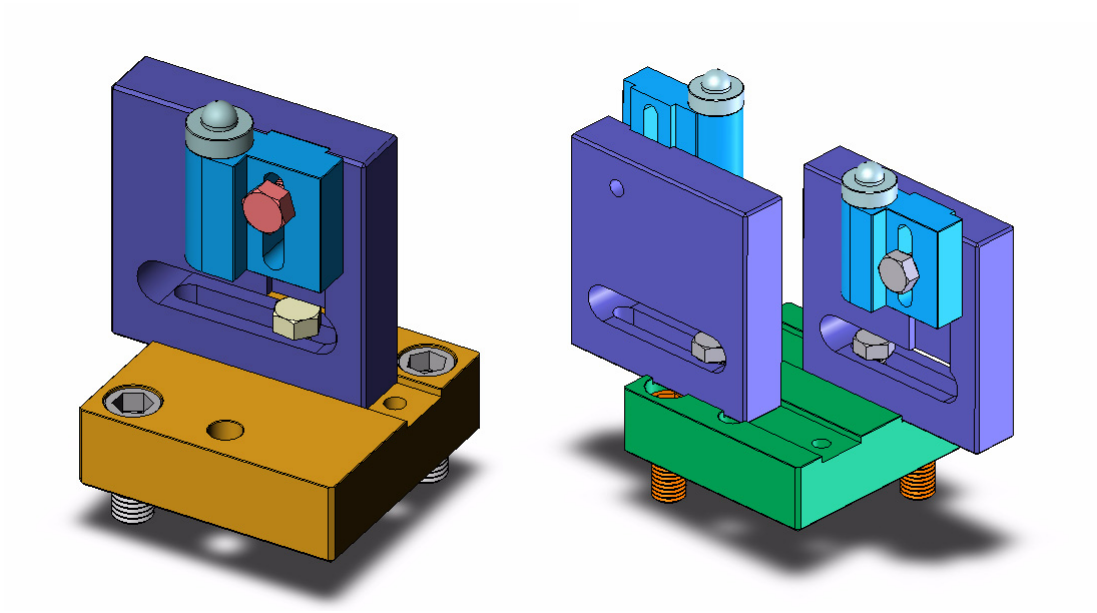

Figure 4.16 *The assemblies for the primary location for the test fixture*

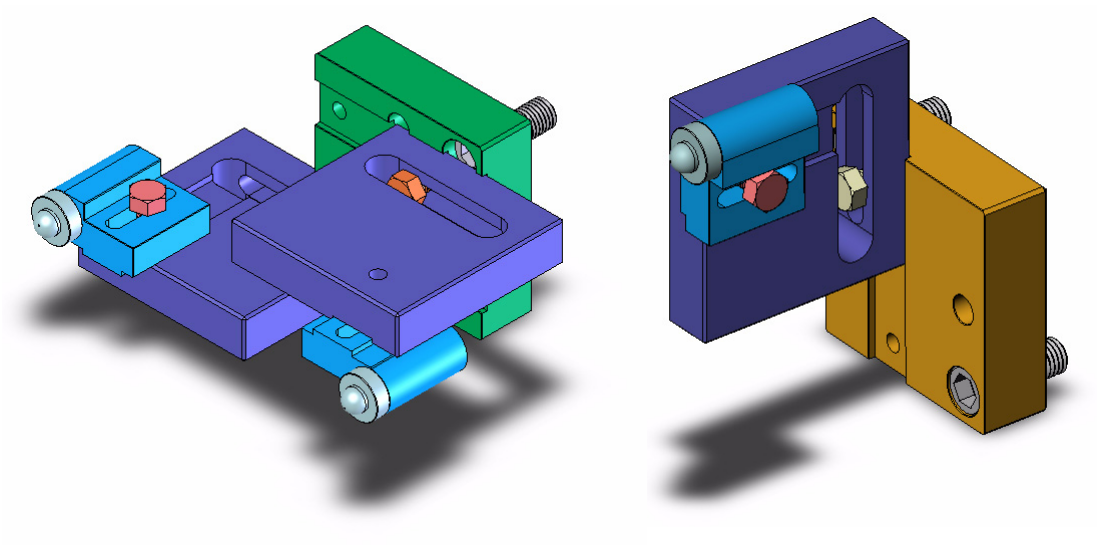

Figure 4.17 *The assemblies for secondary and tertiary location for the test fixture*

The test fixture assembly

Once the various assemblies for the locating were completed it was decided to use the modular fixtures as the main base system and various standard components were used to assemble the fixture together. The Bluco systems modular fixture "System-412" was used and the rectangular base plate with alternating grid holes with dowel and threaded holes were used. Two consoles were used to support the secondary and tertiary locating assemblies. And a regular strap clamp with a flexible-spherical contact was selected. The completed assembly is shown in Fig. 4.18. The real manufactured fixture with sensors mounted on them is shown in Fig. 4.19.

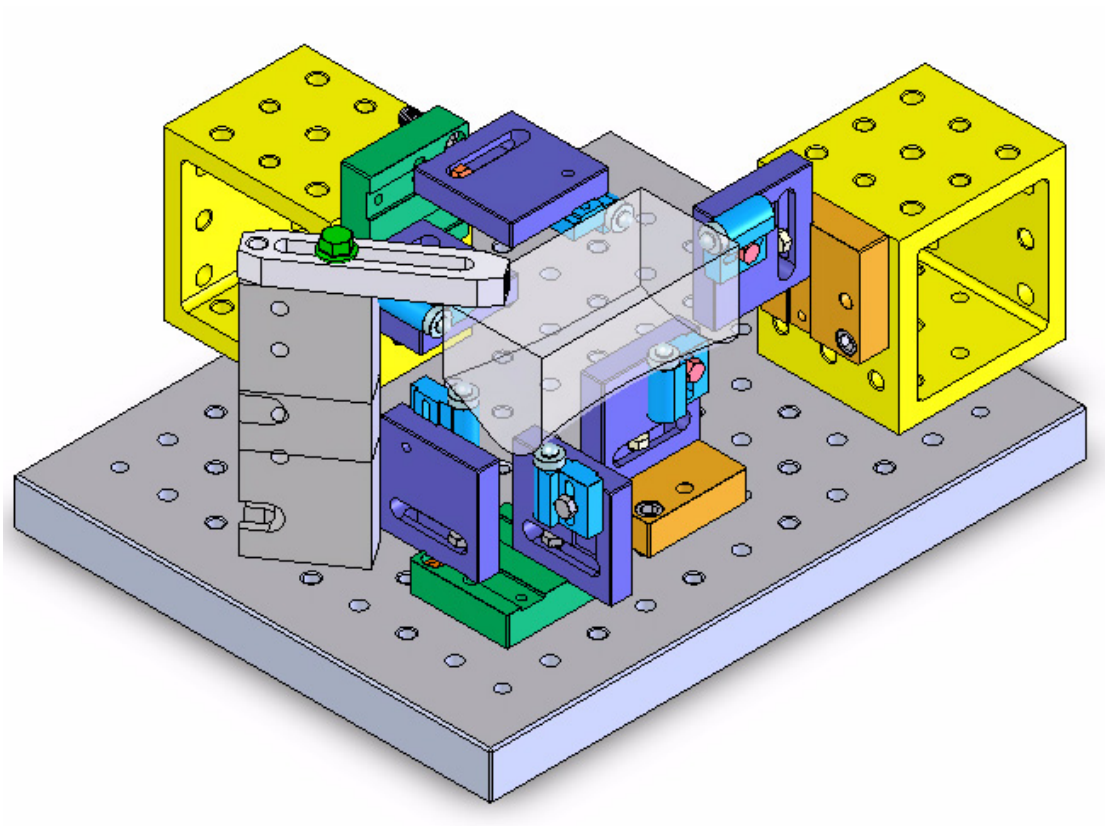

Figure 4.18 *The graphical illustration of test fixture assembly with workpiece loaded*

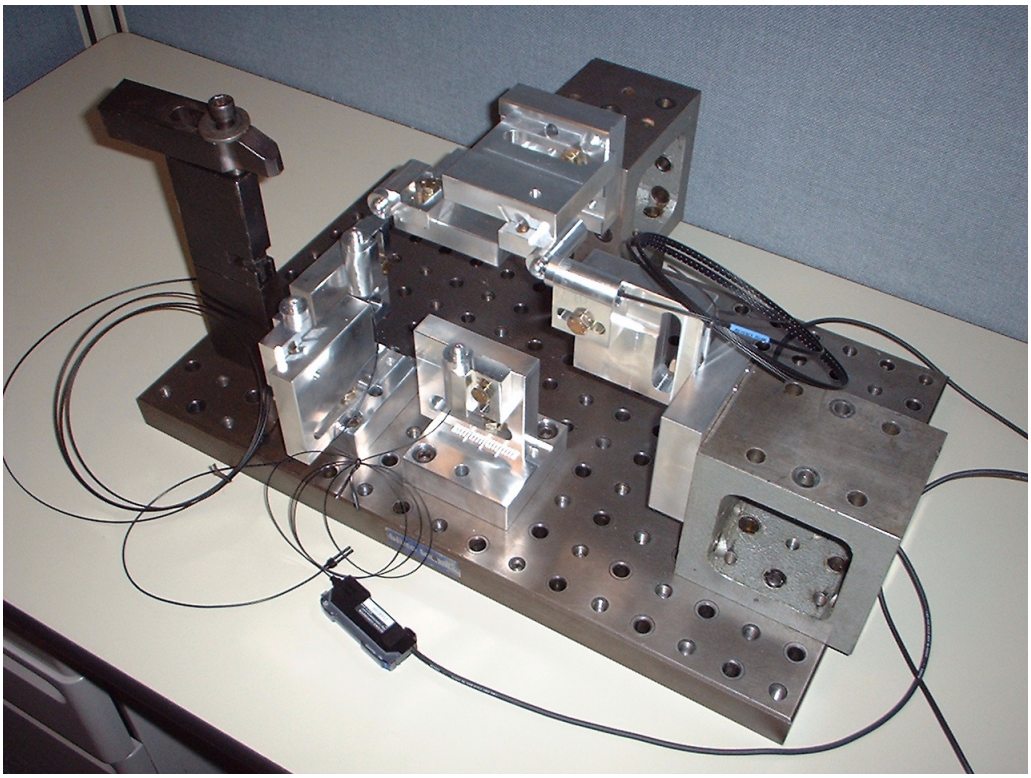

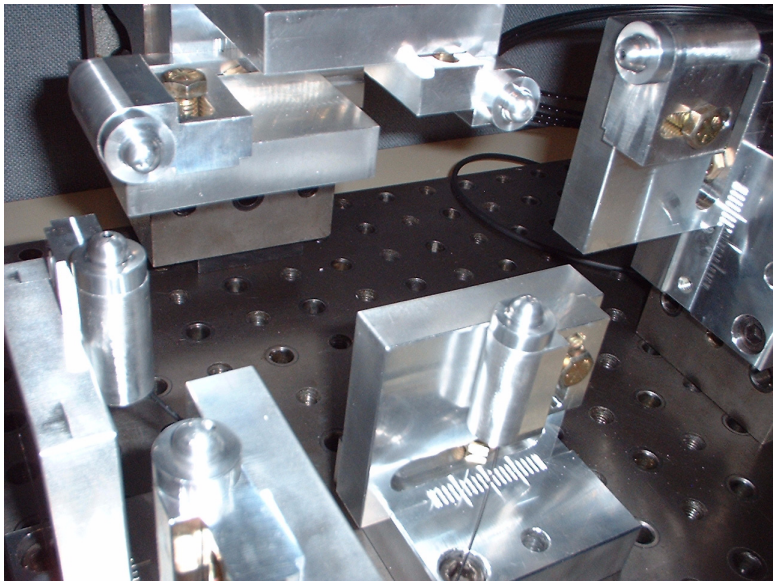

Figure 4.19 *Picture of the actual test fixture with sensors*

4.7 Experiment Design & Results

An experiment was designed to conduct tests to verify the theoretical predictions. A workpiece was machined with free form surface on one side resembling the turbine blades profile with varying radius of curvatures. The workpiece had flat surfaces on the other sides to simplify the problem and to study the free form surface better. The locators were positioned based on the 3-2-1 locating scheme at various locations as shown in the Fig. 4.20. The locators were named "A", "B" and "C" in the primary locating surface, "2" and "3" in secondary locating surface and "1" in tertiary locating surface.

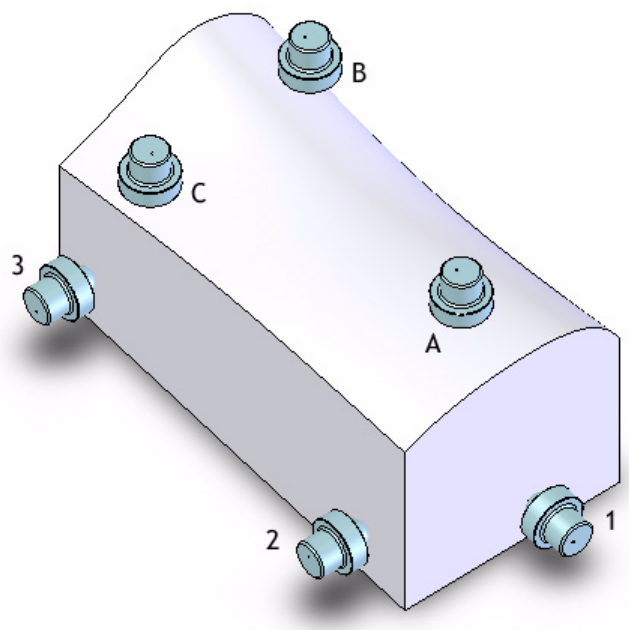

Figure 4.20 *The locating scheme and the locator's names/locations - viewed upside down*

The locators were placed at various curvatures. Fig. 4.21 illustrates the locator positions and the plot for the surface curvature values. The locators were placed by considering two factors one was to place the locators at three different radius of curvatures and at places with varying rate of change of radius of curvatures, so both the effects could be studied in the experiments.

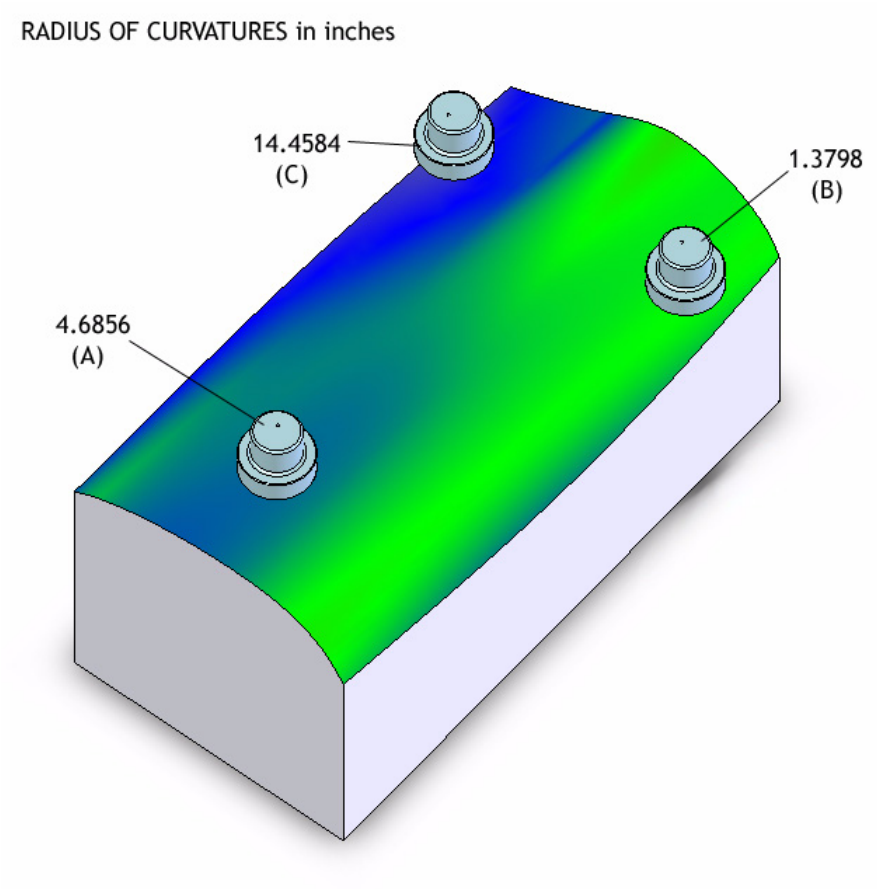

Figure 4.21 *3-D curvature plot & Radius of curvatures at the locator - locations in the primary locating surface*

The Fig. 4.22 shows the plot for radius of curvature. Once the locations were decided the challenge was to position the locators exactly at the required locations accurately. Since the fixture base was made adjustable to increase the flexibility it took the toll on the accurate positioning of the locators. So to place the locators as accurate as possible the whole fixture with the base plate was mounted on table of a CNC machining center (Fig. 4.23) and a dial gage with a least count of 0.0005 inches on the spindle. The location of the locators was determined accurately in the X and Y plane by this method and dial was run on the top surface of workpiece after loading it on the fixture to make the surface flat by adjusting the locators vertical positions, by doing it was made sure all the locators made contact at the required locations as planned in the experimental setup.

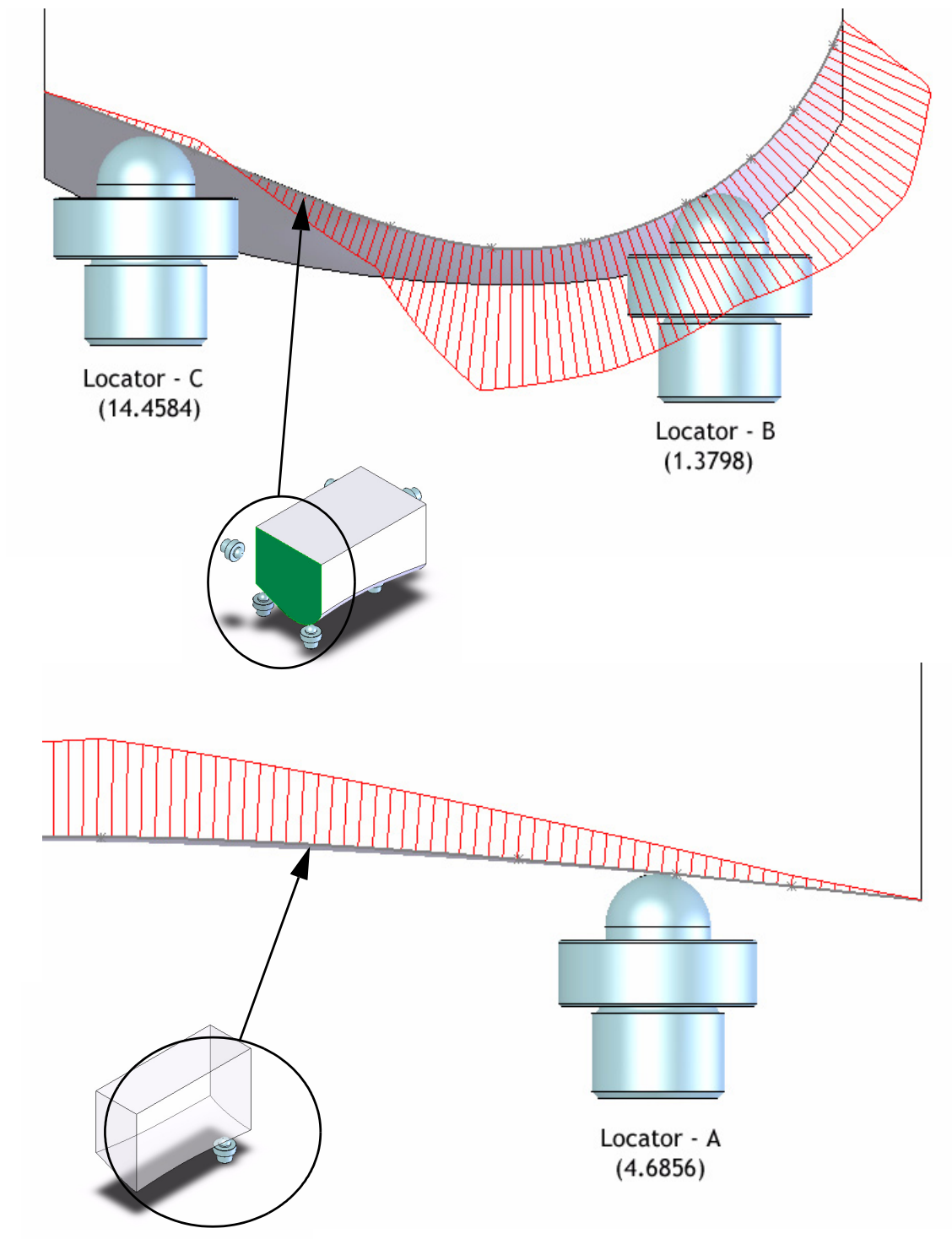

Figure 4.22 *Cross sectional 2-D curvature plots and the corresponding radius of curvatures (inside parenthesis) at the locators- locations in the primary locating surface*

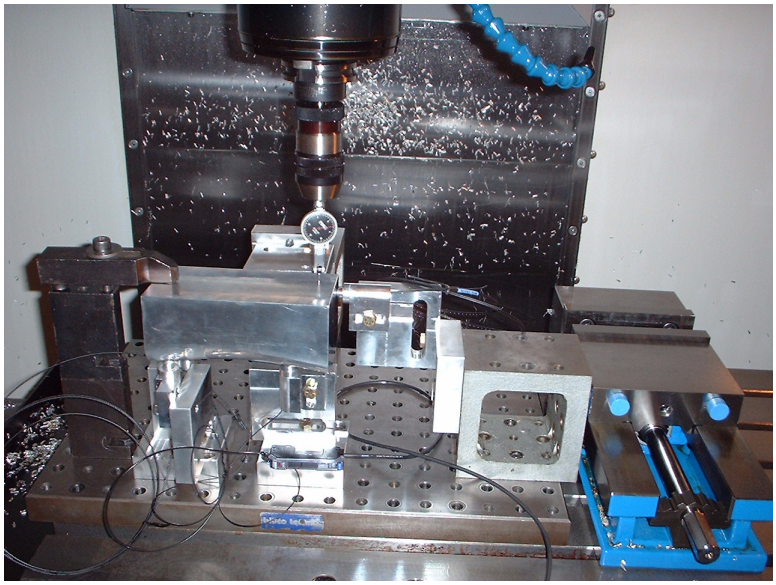

Figure 4.23 *The setup with the help of a dial gage on CNC machining center*

Four kinds of fiber optic sensors with different specifications were selected to study the performance of each under different experimental conditions. The specifications of various sensors used for the experiments were,

1. Sensor Xa - Sensor head - ∅0.06", Core fiber (4 x ∅0.265mm (0.01"))
2. Sensor Xb - Sensor head - ∅0.12", ∅0.275mm (0.11") lens, Beam spot ∅0.004"
3. Sensor Xc - Sensor head - ∅0.12", Core fiber (2 x ∅1.0mm (0.04"))
4. Sensor Xd - Sensor head - ∅0.1", Core fiber (2 x ∅1.0mm (0.04"))

Amplifier used along with the sensors had the following specification,
Light source - Red LED, Response time - 250µs (FINE)/500µs (TURBO)/1ms (SUPER TURBO)/4ms (ULTRA TURBO)/500µs (HIGH RESOLUTION)/50µs (HIGH SPEED), Detection mode - Light intensity/rising edge/falling edge, Display shift function - Max. ±1999 (variable), Control Output - NPN or PNP 100 mA max. (40VDC max), Residual voltage : 1Vmax., Power Supply - 12 to 24VDC ±10% , ripple: 10% max. Shock resistance - 500 m/s^2 Three times each in X, Y, and Z directions.

Experiment Results and Discussion

The test was conducted on all the sensors by placing them at different locations. An initial location where all the locators are in contact with the workpiece was set as zero and the sensor was taught as its default value. So if the workpiece is not in contact a red LED glows indicating it is not in contact and this is shown as "0" in the tables that follow. A know disturbance of 0.0015" (0.04mm) was introduced at various locators and the sensor reading was taken. An ideal result will show "0" in all the spaces except the row "ZERO"

TABLE 4.1 Test results - Sensor Xa

Individual Disturbance (at various locators)	**Sensor at A** κ=0.21341	**Sensor at B** κ=0.72474	**Sensor at C** κ=0.06916	**Sensor at 1** κ=0 (**R**=∞)
ZERO	1	1	1	1
0.0015" (0.04mm) at 1	0	0	0	-
0.0015" (0.04mm) at 2	1	0	1	0
0.0015" (0.04mm) at 3	1	0	1	0
0.0015" (0.04mm) at A	-	0	0	0
0.0015" (0.04mm) at B	0	-	0	0
0.0015" (0.04mm) at C	0	0	-	1

(Note: κ =curvature, **R***=Radius of curvature, "0" - contact lost, "1"- maintains contact & "-" - no measurement)*

From the results in Table 4.1 we can see that when the sensor was placed at location B it was very sensitive and detected the disturbances from all the locators. The next sensitive location was location 1, it was not able to pick the disturbance at C. The sensors when placed at A & C were least sensitive and behaved in a similar manner. It could not pick the disturbance from 2 and 3. Also another way of looking at the results is whenever a disturbance was introduced at locations 1, A and B the sensors worked fine. When the disturbance was introduced at 2, 3 and C they did not pick the disturbance.

The location B had the least radius of curvature (maximum curvature) so we can infer that the sensor Xa's performance was better when the sensor was placed at the locations where the radius of curvature was minimum.

The Sensor Xb was a special one, it had a beam spot diameter of 0.004" and it had to be positioned normal to the surface. Due to technical constraints it was not possible to position the sensors in the primary locating surface, instead they were used in the secondary and tertiary locating surfaces which were flat. So the Table 4.2 is a little different from the rest.

TABLE 4.2 Test results - Sensor Xb

Individual Disturbance (at various locators)	**Sensor at 1** $\kappa = 0$ (**R**=∞)	**Sensor at 2** $\kappa = 0$ (**R**=∞)	**Sensor at 3** $\kappa = 0$ (**R**=∞)
ZERO	1	1	1
0.0015" (0.04mm) at 1	-	0	0
0.0015" (0.04mm) at 2	1	-	1
0.0015" (0.04mm) at 3	0	0	-
0.0015" (0.04mm) at A	0	1	0
0.0015" (0.04mm) at B	0	0	0
0.0015" (0.04mm) at C	0	1	0

(Note: κ =curvature, **R***=Radius of curvature, "0" - contact lost, "1"- maintains contact & "-" - no measurement)*

The results obtained for the sensor Xb cannot be interpreted with the radius of curvature. As the locations at 1, 2 and 3 were planar they had a radius of curvature - ∞ (curvature - 0). Also there were not significant differences from the tests at different locations, the locations 1 and 3 had similar results and location 2 was insensitive when the disturbances were introduced from A and C.

The Table 4.3 shows the results obtained for the sensor Xc at various locations. The sensor had the best performance of all the sensors that were tested. The only disturbance that the sensor was not able to pick was the when the sensor was located at C. The radius of curvature was maximum (14.4584) and curvature was minimum at this location when compared with the other locations. The location 1 also had a curvature of zero but the radius of curvature for a flat surface is ∞. So it cannot be inferred by just using the curvature values we need to consider both the curvature and the radius of curvature.

TABLE 4.3 Test results - Sensor Xc

Individual Disturbance (at various locators)	**Sensor at A** κ =0.21341	**Sensor at B** κ =0.72474	**Sensor at C** κ =0.06916	**Sensor at 1** κ =0 (**R**=∞)
ZERO	1	1	1	1
0.0015" (0.04mm) at 1	0	0	1	-
0.0015" (0.04mm) at 2	0	0	1	0
0.0015" (0.04mm) at 3	0	0	0	0
0.0015" (0.04mm) at A	-	0	0	0
0.0015" (0.04mm) at B	0	-	0	0
0.0015" (0.04mm) at C	0	0	-	0

(Note: κ =curvature, **R***=Radius of curvature, "0" - contact lost, "1"- maintains contact & "-" - no measurement)*

So the sensor Xc had a similar property like sensor Xa (Xa had best performance when it was located, where the radius of curvature was minimum). It had the least sensitivity when the sensor was located where the radius of curvature was maximum.

The Table 4.4 shows the results from the tests for the sensor Xd. The sensor was able to pick all the disturbances when it was located at location B. When the sensor was located at A the sensor did not pick the disturbance at B. When the sensor was located at C other

TABLE 4.4 Test results - Sensor Xd

Individual Disturbance (at various locators)	**Sensor at A** κ =0.21341	**Sensor at B** κ =0.72474	**Sensor at C** κ =0.06916	**Sensor at 1** κ =0 (**R**=∞)
ZERO	1	1	1	1
0.0015" (0.04mm) at 1	0	0	0	-
0.0015" (0.04mm) at 2	0	0	1	1
0.0015" (0.04mm) at 3	0	0	1	1
0.0015" (0.04mm) at A	-	0	1	0
0.0015" (0.04mm) at B	1	-	1	1
0.0015" (0.04mm) at C	0	0	-	0

(Note: κ =curvature, **R***=Radius of curvature, "0" - contact lost, "1"- maintains contact & "-" - no measurement)*

than the disturbance introduced from 1 it did not pick any of the disturbances. When the sensor was located at 1 other than the disturbances introduced from A and C it did not pick any other disturbances. The sensor Xd also behaved in a similar manner like the sensors Xa and Xc. It had the best performance at B (the radius of curvature was minimum at B) and had the worst performance at C (the radius of curvature was maximum at C)

From the different tests conducted at various locations one of the inferences on the sensitivity of the sensors was,

- The best sensitivity was observed when the sensors were placed at locations with minimum radius of curvature (R) and maximum curvature (κ).
- The worst sensitivity was observed when the sensors were placed at locations with maximum radius of curvature (R) and minimum curvature (κ).

In order to understand the sensors behavior further, the changes in readings were measured for the different sensors at various locations and are plotted in the figures that follow.

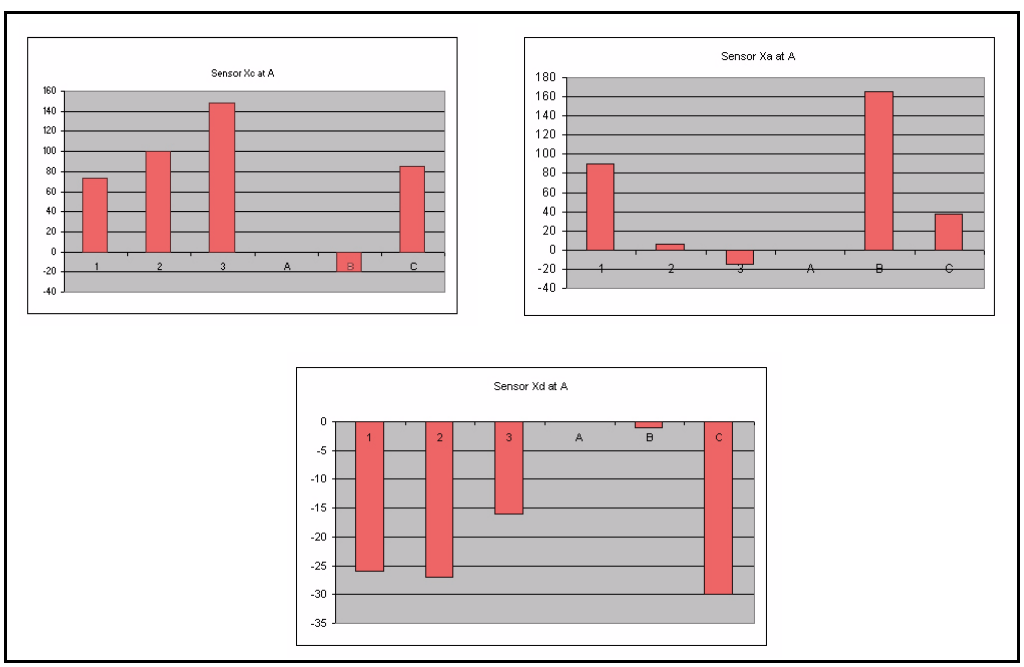

Figure 4.24 *Sensors at Locator - A*

The results of the tests conducted for various sensors at A were shown in Fig. 4.24. The curvature (κ) was 0.21341 at the location A. The sensors Xc and Xa behaved in a similar manner but the sensor Xd behaved in a totally opposite manner when compared with Xc and Xa. Also there were no similarities in their behavior between the sensors.

The results of the tests conducted for various sensors at B are shown in Fig. 4.25. The curvature (κ) was 0.72474 at the location B. This was the location with the highest curvature and was very sensitive for the earlier tests. The plot shows that all the sensors behaved in a very similar manner and was predictable at this location. Except for the disturbance at 3 for sensor Xa at B which had a positive value, rest all the readings followed a negative pattern. The sensors at this location exhibited a uniform behavior.

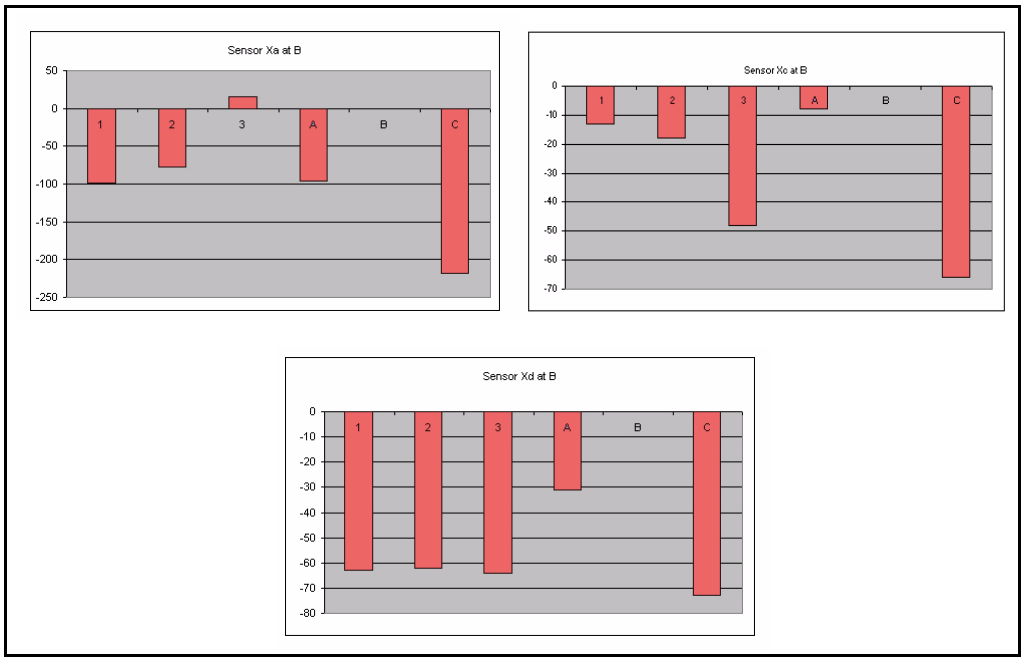

Figure 4.25 *Sensors at Locator - B*

The results of the tests conducted for various sensors at C are shown in Fig. 4.26. The curvature (κ) was 0.06916. This location had the least curvature other than the location 1 which had a flat surface. The sensor's output was not predictable and it had changes in both positive and negative directions. No concrete conclusions could be drawn from the results.

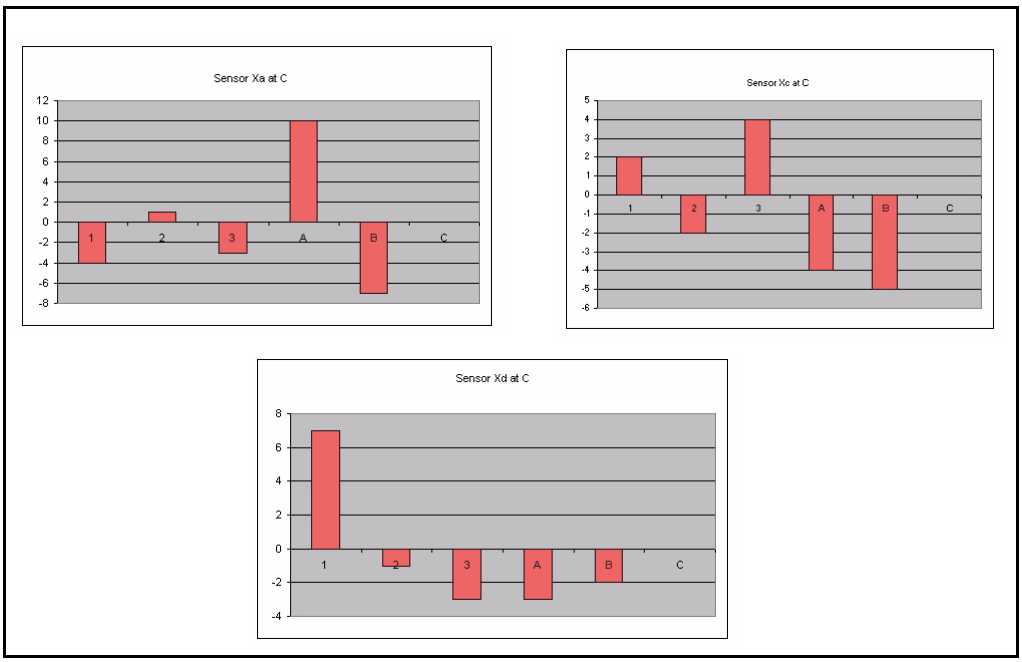

Figure 4.26 *Sensors at Locator - C*

The results of the tests conducted for various sensors at 1 are shown in Fig. 4.27. The curvature (κ) was 0 (as the R was ∞) This was the only planar surface that was tested and it includes the sensor Xb which was a special sensor that worked only when placed in the normal direction to the surface. As this surface was flat it was easily positioned in the normal direction. Due to technical difficulties, it was not possible to position the sensor for the other locations so the Fig. 4.27 has 4 plots. There were no solid patterns to infer from the plots and there were no similarities either.

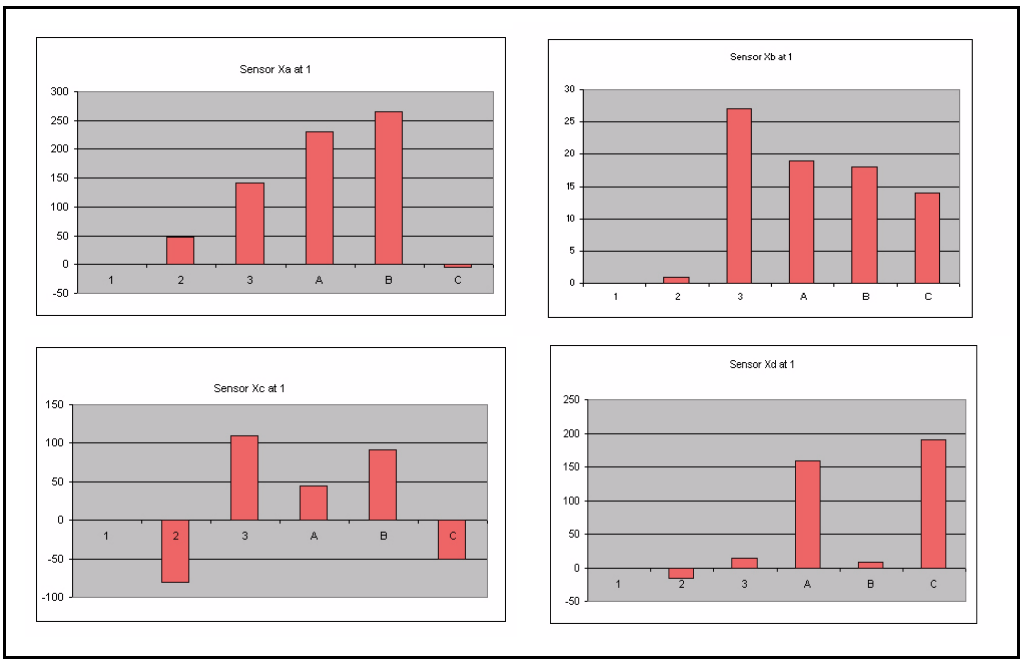

Figure 4.27 *Sensors at Locator - 1*

4.8 Conclusions

The test fixture was used to conduct the experiments on a archetype workpiece that had a complex free form surface with varying curvatures (κ). From the results obtained it is concluded that the sensors were extremely sensitive when they were placed at locations were the κ was maximum and least sensitive when they were placed at locations where the κ was minimum. Also the sensors performance was better when they were placed on a free form surface with varying curvatures rather than a flat planar surface. Also all the sensors behavior was alike when they were placed at locations where the κ was maximum.

This opens a new door for the design of fixtures with sensors for complex free form workpieces. Rather than using the traditional locating techniques, the advantage of curvatures on the workpiece have to be utilized when placing the locators in the fixture.

Chapter 5

CASE STUDIES AND ALGORITHM VERIFICATION WITH INTEGRATED LOCATORS

5.1 Introduction

There is a need to have an integrated locator with sensor for foolproofing and error proofing applications. As the various foolproofing needs are discussed in Chapter 3, one of the main requirements of the existing fixtures is the implementation of the new techniques without much changes to the existing design and not to interfere in the tool path of the existing parts. So to realize such needs an integrated locator with proximity sensors is designed and tested for various applications. To validate the foolproofing algorithms various case studies are conducted and discussed in detail

5.2 Proximity Sensors

Proximity sensors can detect metal objects, without physical contact with the target. Proximity sensors are classified as three types based on the principles of operation, the electromagnetic inductive type, the magnetic type using a magnet and the capacitance type using the change of capacitance. The electromagnetic high frequency oscillation type proximity sensor has been selected for the foolproofing applications as it had better required features for the current application. The main features that led to selection of this type of sensor is the, non contact detection, stable detection in harsh environment with coolant, oil and chips, high response speed and compactness. A shielded type sensor is preferred due to the limitation of non-shielded sensors that does not allow flush mounting sensors inside metal.

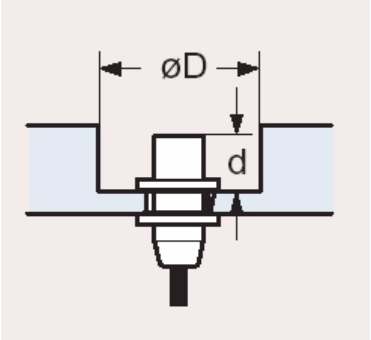

Figure 5.1 *Limitation of using a non-shielded proximity sensor*

The Fig. 5.1 shows the limitation of the clearances required to flush mount the sensors inside the metal (a minimum clearance of ∅D and d are required) and also the non-shielded sensors interfere with sensors that are placed close to each other.

To simplify the installation process and make the operation simple for a person in job shop to understand, a self contained unit with an output indicator built into the unit is chosen. The LED that is built into the unit glows confirming the operation, that eliminates the use of amplifiers and saves space in the fixture.

5.3 Locator design

An integrated locator is designed based on the existing modular fixture components. The new locator can be made a special element in the modular fixture catalog that could be used when ever there is a need for foolproofing or error proofing. The proximity sensor comes with thread along the external body so the locator is made hollow and threaded according to the sensor and the locator is made hollow for the cable to run through. Since the sensor is a self contained type an LED glows on the sensor so a slot was machined to enable the easy view of the LED. The complete design is shown in Fig. 5.2

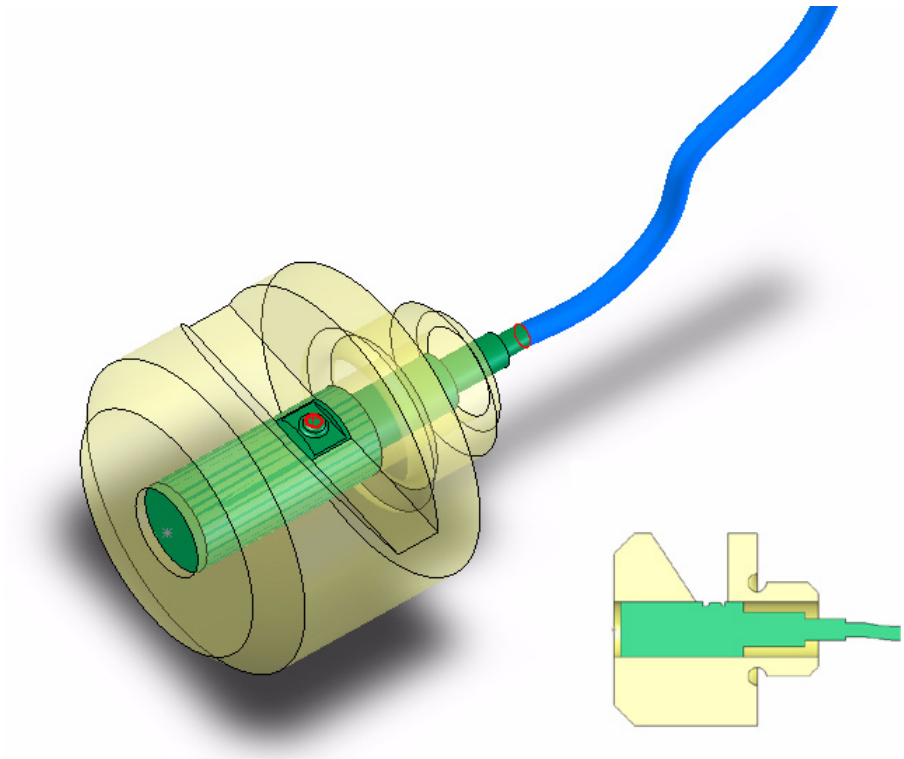

Figure 5.2 *Integrated locator with a self-contained proximity sensor*

In some cases the machining of the locator cannot be possible and the operator may not be able to verify the LED at all locations in that case a slightly modified version is proposed. Instead of using the sensor that has LED on the sensor head an another version that has the LED on the cable can be used, so the machining of the locator is avoided. In cases where more than one integrated locator is used all the LED displays can be put together where the operator can easily verify the operation. The sensors were tested for their operation, as the main application is detection of features various tests were conducted and the test details are discussed in detail in the following paragraphs.

5.4 Proximity Sensors Used

The integrated locators had proximity sensors as their sensing elements. To validate the sensors and verify our claims the sensor was tested for detecting the features on the parts. The sensor was placed at one of the console locations in the modular fixture and few parts that need foolproofing were used to check the proper functioning of the sensors. The sensors were accurate in the order of a few millimeters. As the current application does not require such high tolerances the sensors performance was considered very good.

The sensors were also used to check for the presence/absence of features like slots, holes, etc.,. The Fig. 5.3 shows the two sensors used to test the features on the various parts. Both the sensors were held in place on a modular fixture base plate and the different components were placed in a simulated fixturing environment. The sensors had an LED mounted on the sensor heads that glows when it is in contact with the metal target.

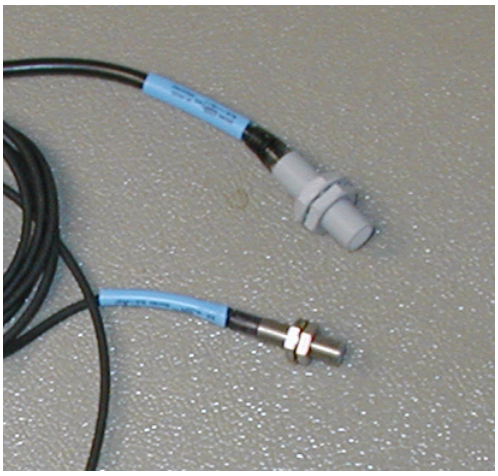

Figure 5.3 *The two proximity sensors used for the case studies*

An another test was conducted to verify the detection of features. The two common features chosen was the slots and the holes (Fig. 5.4), during both the applications the sensors performed on all occasions. One of the limitations while detecting these features were, when the slot sizes reduce below 1/3rd the sensor diameter the sensor performance deterioated. The same was the case when the hole diameter was less than half the sensor diameter.

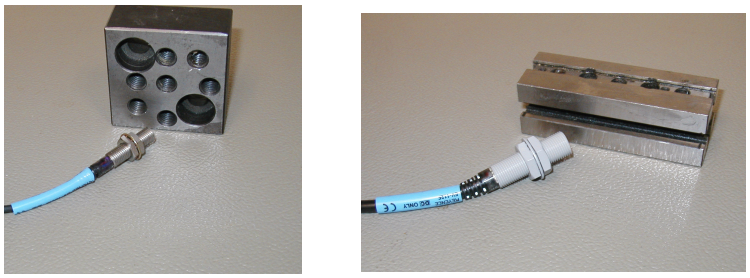

Figure 5.4 *The different features checked using the sensors*

As this is just a preliminary study to verify the feasibility detailed test were not performed. To get absolute results under various operating conditions a detailed experiment is required to validate the results under those conditions. Also the design for the integrated locators need to be verified with the actual sensors in place. And the various parameters need to be verified before using them on the fixtures.

5.5 Foolproofing algorithms

The algorithms were verified by applying them on various sample parts in different categories as discussed from Chapter 3. The results from the symmetry transformations are shown in Tables 5.1-5.4. The results were verified manually to check the results whether the selected surface was actually the preferred surface for foolproofing. The results were perfect, in all the cases when the total was minimum. The solutions were not unique when we had a tie in the total in the locating rows. As our strategy was to give importance to primary locating first, secondary locating next and the tertiary locating last, it worked we in most cases but in some occasions it would be preferred to search for solutions in the other locating plane where the tie has occurred. Apart from this problem the algorithm seemed to work pretty well.

The Table 5.1 shows the tie in the minimums of the locating values. But our strategy of going for the secondary locating surface was good for this case as the solution was better in the secondary locating plane. But in a similar case where there is a tie in the minimums in Table 5.3 prompted us to pick the primary locating surface for searching the solutions.

TABLE 5.1 Symmetry table - Case study (Refer Fig. 3.5(a))

	U	V	W	P	Q	R	S	Total
Primary	1	1	1	1	1	1	1	7
Secondary	0	0	0	0	1	0	0	1
Tertiary	0	0	0	1	0	0	0	1
Total	1	1	1	2	2	1	1	

But this produced a solution space that was involved in a complicated case, but still there were results produced but the solution space in the tertiary locating surface could have yielded in unique and a different solution space. There is a need to decide how to go about when there is a tie in the minimum values more research is necessary to understand the geometries and the locating surface selection strategy selection in case of a tie.

TABLE 5.2 Symmetry table - Case study (Refer Fig. 3.6(b))

	U	V	W	P	Q	R	S	Total
Primary	0	0	0	1	0	0	0	1
Secondary	0	0	0	0	0	0	0	0
Tertiary	0	0	0	1	0	0	0	1
Total	0	0	0	2	0	0	0	

TABLE 5.3 Symmetry table - Case study (Refer Fig. 3.6(a))

	U	V	W	P	Q	R	S	Total
Primary	0	0	0	1	0	0	0	1
Secondary	0	1	0	1	1	0	0	3
Tertiary	0	0	0	1	0	0	0	1
Total	0	1	0	3	0	0	0	

TABLE 5.4 Symmetry table - Case study (Refer Fig. 3.5(b))

	U	V	W	P	Q	R	S	Total
Primary	0	0	0	1	0	0	0	1
Secondary	0	0	0	1	1	0	0	2
Tertiary	0	1	0	1	1	0	0	3
Total	0	1	0	3	2	0	0	

5.6 Implementation of the Algorithms

The different algorithms for foolproofing were implemented in SolidWorks using the Application Programming Interface. The system is not complete but in separate modules for each process. The one of the modules was the midplane selection from the given solid model based on the boundary geometry.

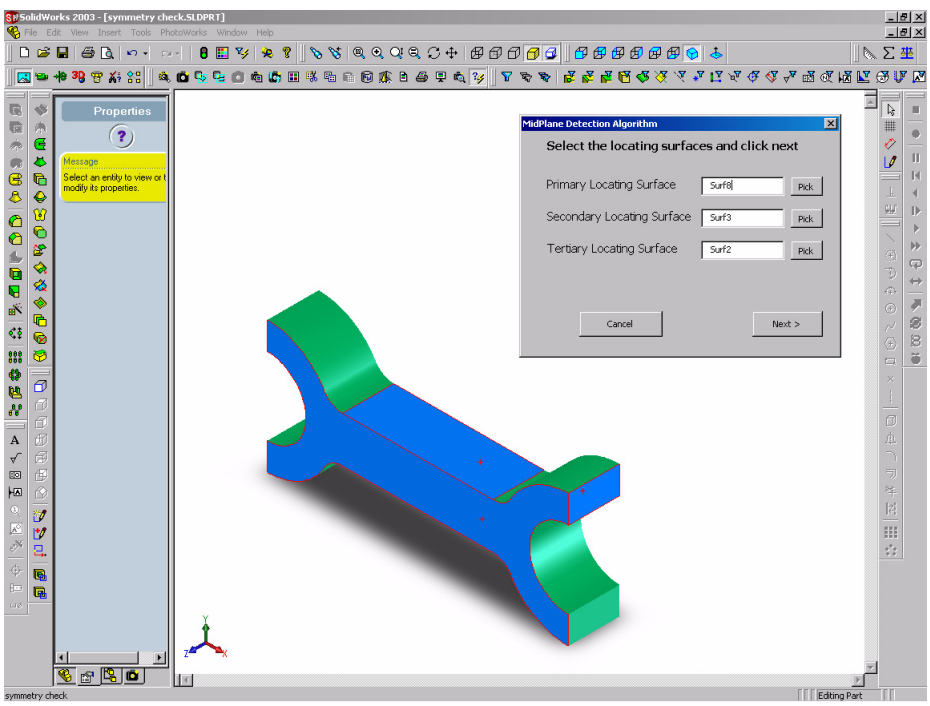

Figure 5.5 *The screenshot of the window for selecting the locating surfaces*

The Fig. 5.5 shows the window where the various locating planes are specified and the next window prompts for the boundary surfaces to determine the bounding box (Fig 5.6)

once the boundary surfaces and the locating surfaces are known the program calculates the midplanes for the symmetry checking and creates new reference planes in those midplanes and using those reference planes a thin rectangular profile is generated using which the geometry can be split in either direction and the part can be compared to classify it in different categories by using the standard geometry compare command inside the API.

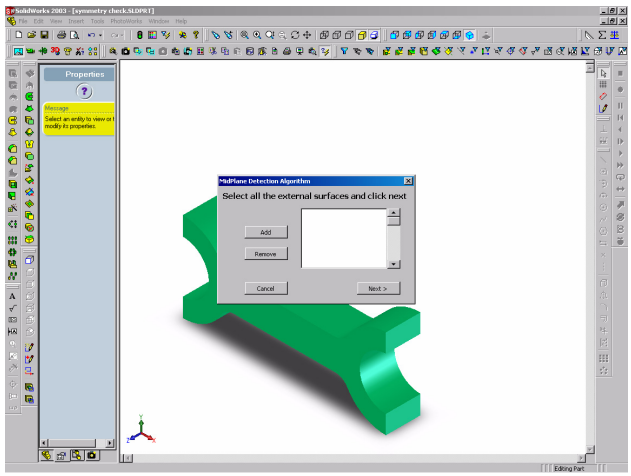

Figure 5.6 *The screenshot of the window for selecting the boundary surfaces*

After the comparison of the geometry the symmetry occurrences is recorded for the plane of occurrence and based on those occurrences the part is classified into the four categories. The sub categories are determined again based on the plane of symmetry occurrence.

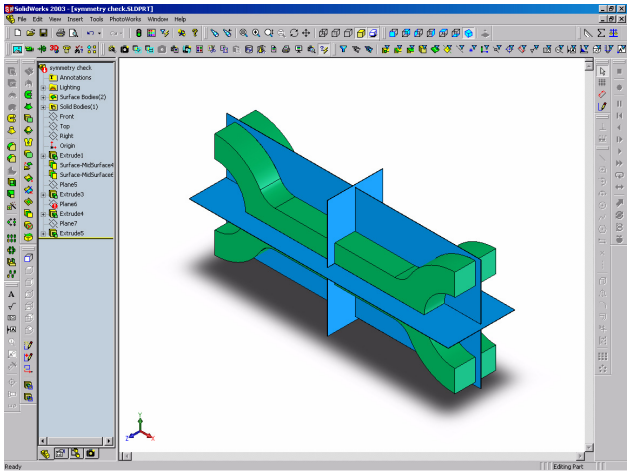

Figure 5.7 *The screenshot of the final generated midplanes to validate symmetry*

Banana Peel Algorithm

The standard functions in generating 2-D projection views was used to simplify the part based on the locating scheme and based on the Banana Peel Algorithm. The Figure 5.8 shows the part and the Fig. 5.9 shows the part representation after simplification.

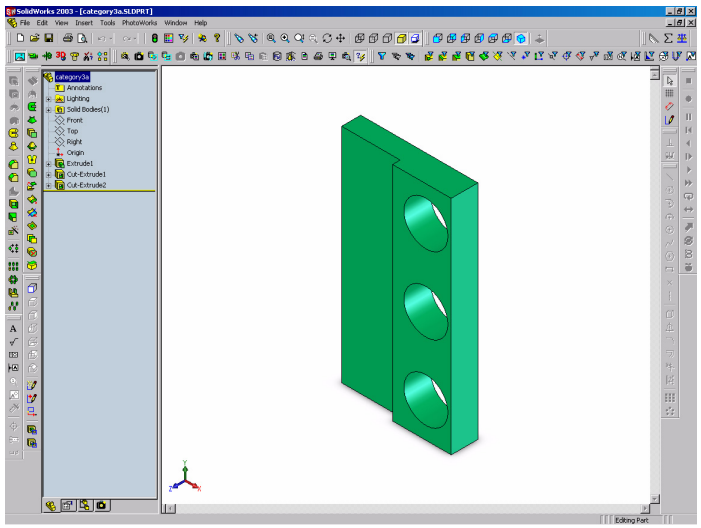

Figure 5.8 *The screenshot of the part before part simplification*

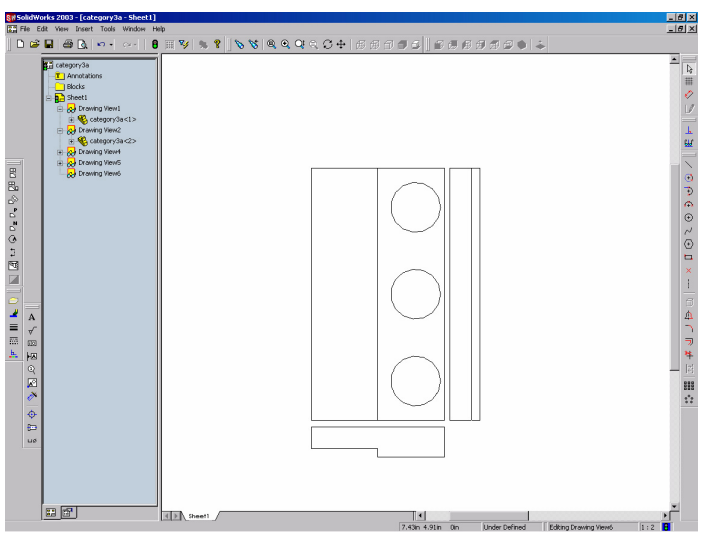

Figure 5.9 *The screenshot of the part after simplification using the projection functions*

5.7 Results

The various algorithms and the sensors for foolproofing were verified. The foolproofing based sensors need to be checked with the actual locator enclosure under varying operating conditions to verify the proper operation. The various algorithms for symmetry have been manually verified for different parts under various categories. The strategy for picking the best surface to check for the solution in case of a tie is weak. As explained earlier in some cases the solution where a wrong plane is chosen is not good. More research is required to determine the direction to proceed in case of a tie in the symmetry table.

Chapter 6

CONCLUSIONS

6.1 Overview

The various 3-D foolproofing algorithms were developed and verified. The sensor based foolproofing applications were implemented based on the existing 3-2-1 locating fixtures. The algorithms that will detect the need for foolproofing are also proposed. Few of the algorithms are implemented in a commercial CAD software.

Sensor based fixture was designed for part location verification and experimental fixture was built to analyze the effect of sensors at various locations on the free form surfaces. The relationships between the curvature (κ) and radius of curvature (R) with the various sensors has been studied. The experimental results are analyzed to correlate the various relationships.

An integrated locator with sensor is designed for foolproofing /error proofing. Various case studies are conducted to figure the optimum performance of the sensors.

6.2 Conclusions

An unique 3-D fixture based algorithm has been developed for foolproofing parts. Also a new generation in foolproofing with the use of sensors is introduced. The algorithm can be applied to the existing fixture designs and the existence of a foolproofing solution could be found. The foolproofing greatly improves the manufacturing system reliability by pre-

venting accidents and increasing the equipment uptime. Foolproofing fixtures will prevent defects or non conformities that fallible human beings would otherwise make through inadvertence.

Some significant conclusions have been drawn after the experiments conducted for the part location contact verification with complex free form surface with varying curvatures (κ). The results obtained concluded that the sensors were extremely sensitive when they were placed at locations were the κ was maximum and least sensitive when they were placed at locations where the κ was minimum. Also the sensors performance was better when they were placed on a free form surface with varying curvatures rather than a flat planar surface. Also all the sensors behavior was alike when they were placed at locations where the κ was maximum.

This opens a new door for the design of fixtures with sensors for complex free form workpieces. Rather than using the traditional locating techniques, the advantage of curvatures on the workpiece have to be utilized when placing the locators in the fixture.

The integrated sensors were designed and the sensors were tested for different applications. The fixture ergonomics and the accessibility have to considered for these applications. A detailed study with the real integrated sensor is necessary before implementation in the industry.

6.3 Future Work

The current foolproofing algorithm works only for the 3-2-1 based locating schemes, the other algorithm can be expanded to the other locating schemes. The algorithm has to be expanded in detail for the part representation in 3-D planes to search for the solutions in 3-D space. Current algorithm only searches for the solutions in the 3 locating directions, the features that are present in the surfaces other than locating should be utilized for foolproofing.

The current test fixture had only one amplifier so the test were conducted at individually at each locator. The tests need to be conducted simultaneously at all locations with more amplifiers and their combined behavior need to be studied. The test fixture was constrained to 2 degrees of adjustment in the primary locating direction. This can be modified to 3 degrees that will give greater independence to position the locators anywhere on the 3-D space for the free form surfaces. The whole setup can be setup on a Coordinate Measuring Machine (CMM) to accurately determine the errors introduced and the transformations. The holes for the sensors on the locators need to be machined accurately using a 5 axis Machining center in normal direction of the located surface to use the more precise sensors with smaller beam diameters and study their effects. A realtime experiment with different workpieces is necessary to evaluate the effects of part dimension and surface variations.

REFERENCES

[1] Asada, H., By, A., 1985, "Kinematic Analysis of Workpart Fixturing for Flexible Assembly with Automatically Reconfigurable Fixtures", IEEE J. of Robotics and Automation, Vol. 1, 1985, pp. 86-94.

[2] Bai, Y., and Rong, Y., 1995, “Establishment of modular fixture component assembly relationship for automated fixture design,” Symposium on Computer-aided Tooling, ASME IMECE, San Francisco, CA, Nov. 12-17, Vol. 2-1, pp. 805-816.

[3] Brost, R. and Goldberg, K., 1996, "A complete algorithm for designing planar fixtures using modular components", IEEE Transactions on Robotics and Automation, 12(1):31-46, February 1996.

[4] Deep C., Edward C. De Meter and Philip S. S., 2001, "Part Location Algorithms for an Intelligent Fixturing System", NAMRC XXIX, May 22-25,2001, Gainesville, Florida.

[5] Grinders go with the flow - Article, 2002, American Machinist, June 2002.

[6] John Teresko, 2001, "Technologies Of The Year - Intelligent Fixturing System," Industry Week, December 2001.

[7] Kang, Yuezhuang, 2001, "Computer Aided Fixture Design Verification", Ph.D. Dissertation, Worcester Polytechnic Institute, 2001.

[8] Khan, A. M., Ceglarek, D., and Ni, J., 1998, "Sensor Location Optimization For Fault Diagnosis in Multi-Fixture Assembly Systems," ASME J. Manuf. Sci. Eng., 120, No. 4, pp. 781–792.

[9] Khan, A., Ceglarek, D., Shi, J., Ni, J.,Woo, T. C., 1999, "Sensor Optimization for Fault Diagnosis in Single Fixture Systems: A Methodology," ASME J. Manuf. Sci. Eng., 121, pp. 109–117.

[10] Modular Fixturing Handbook, 1998, Carr Lane Mfg. Co. St. Louis, Missouri.

[11] Parts Catalog, 1998, Blüco Technik, Stuttgart, Germany.

[12] Penev, K., Aristides, R., 1995, "Fixture Foolproofing for Polygonal Parts," In International Symposium on Assembly and Task Planning. IEEE, August 1995. Pittsburgh, PA.

[13] Reference Guide to Successful Applications in the Automotive Industry - Poke-Yoke Kaizen Guidebook, 2002, Keyence Corporation of America.

[14] Rong, Q., Ceglarek, D. and Shi, J., 2000, "Dimensional Fault Diagnosis for Compliant Beam Structure Assemblies", Journal of Manufacturing Science and Engineering, November 2000, Vol. 122, pp. 773-780.

[15] Rong, Y and Zhu, Y, 1999, “Computer-Aided Fixture Design”, Marcel Dekker Inc., NY, 1999.

[16] Rong, Y. and Bai, Y., 1996, “Machining Accuracy Analysis for Computer- Aided Fixture Design”, J. of Manufacturing Science and Engineering, Vol. 118, August 1996, pp. 289-300.

[17] Rong, Y., Li, W., Bai, Y., 1995, “Locator Error Analysis for Fixturing Accuracy Verification”, ASME Computer in Engineering, Boston, MA, September 1995, pp. 825-832.

[18] Rong, Y., Wu, S., Chu, T. P., 1994, “Automated Verification of Clamping Stability in Computer-Aided Fixture Design”, Computers in Engineering, Proceedings of the International Conference and Exhibit v /1, September 1994, pp. 421-426.

[19] Sangnui, S., Peters, F., 2001, "The Impact of Surface Errors on the Location and Orientation of a Cylindrical Workpiece in a Fixture," ASME J. Manuf. Sci. Eng., 123, pp. 325–330.

[20] Sensors Vision and Measurement - Technical Guide, 2002, Keyence Corporation of America.

[21] Shigeo, Shingo and Dillon, Andrew , 1986, "Zero Quality Control: Source Inspection and the Poka-Yoke System," Productivity Press Inc., Cambridge, MA, 1986.

[22] Walczyk, F. D., Longtin, S. R., 2000, "Fixturing of Compliant Parts Using a Matrix of Reconfigurable Pins," ASME J. Manuf. Sci. Eng., 122, pp. 766–772.

[23] Wang, Y. and Nagarkar, S., 1999, "Locator and Sensor Placement for Automated Coordinate Checking Fixtures," ASME J. Manuf. Sci. Eng., 121, pp. 709–719.

[24] Weisstein, Eric W. "Radius of Curvature, Curvature and Osculating Circle", Eric Weisstein's World of Mathematics,
http://mathworld.wolfram.com/RadiusofCurvature.html,
http://mathworld.wolfram.com/Curvature.html,
http://mathworld.wolfram.com/OsculatingCircle.html, January 2003.

[25] Xiong, Y. L.,1993, “Theory and Methodology for Concurrent Design and Planning of Reconfiguration Fixture,” Proceedings - IEEE International Conference on Robotics and Automation, Vol. 3, May 2-6, 1993, pp. 305-311.

[26] Zhang,Y., Hu, W., Kang, Y., Rong, Y. and Yen, D. W., 2001, “Locating error analysis and tolerance assignment for computer-aided fixture design”, International Journal of Production Research, Vol. 39, No. 15, 2001, pp. 3529-3545.

Appendix - A

The Surface Topography of the Test Workpiece at the various test locations

At Location A

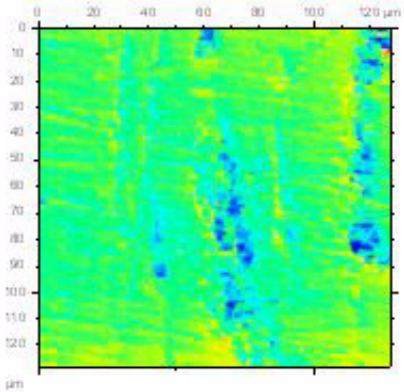

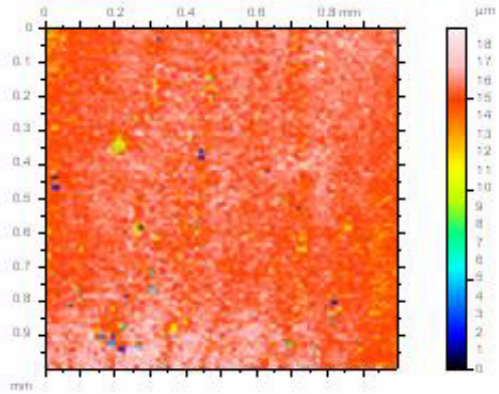

Parameters calculated on the surface
RAD A02-Topography

Amplitude Parameters

Sa	=	0.564 µm
Sq	=	0.791 µm
Sp	=	7.75 µm
Sv	=	5.21 µm
St	=	13 µm
Ssk	=	-1.01
Sku	=	7.57
Sz	=	6.98 µm

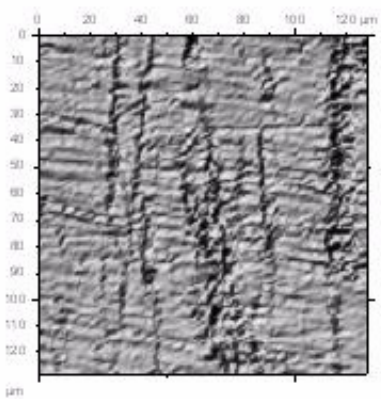

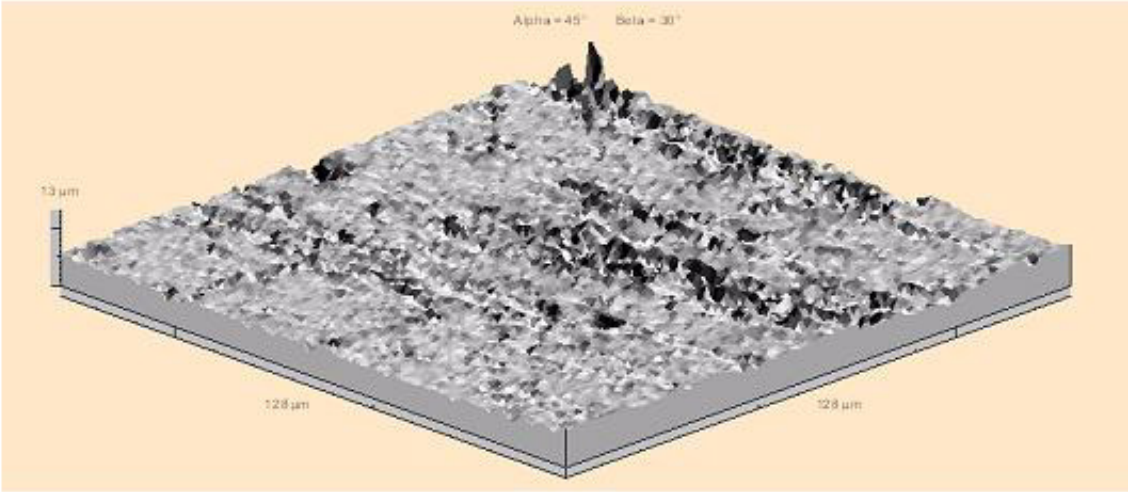

At Location B

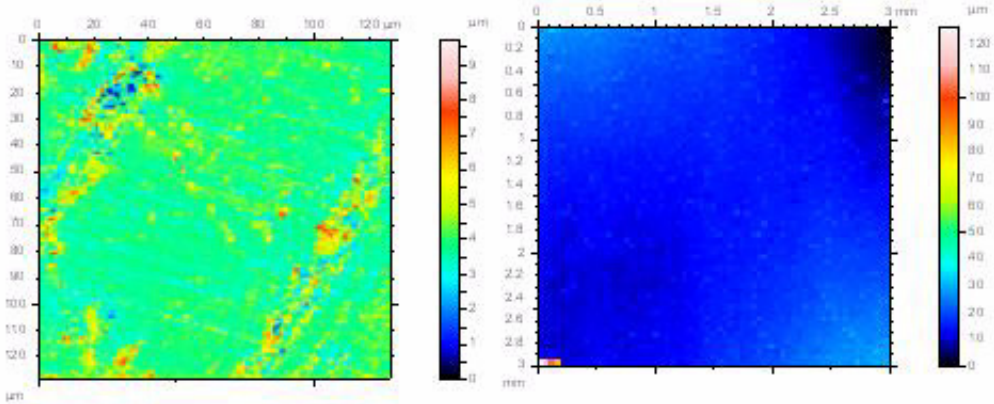

Parameters calculated on the surface
RADA04-Topography

Amplitude Parameters

Sa = 0.442 µm
Sq = 0.661 µm
Sp = 5.8 µm
Sv = 3.92 µm
St = 9.72 µm
Ssk = 1.53
Sku = 9.2
Sz = 7.94 µm

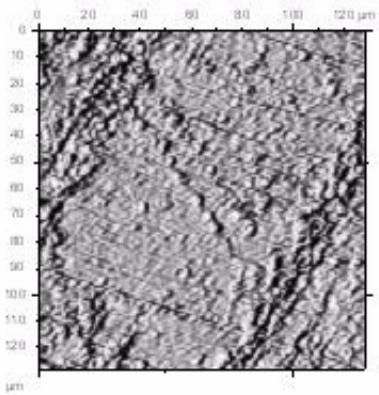

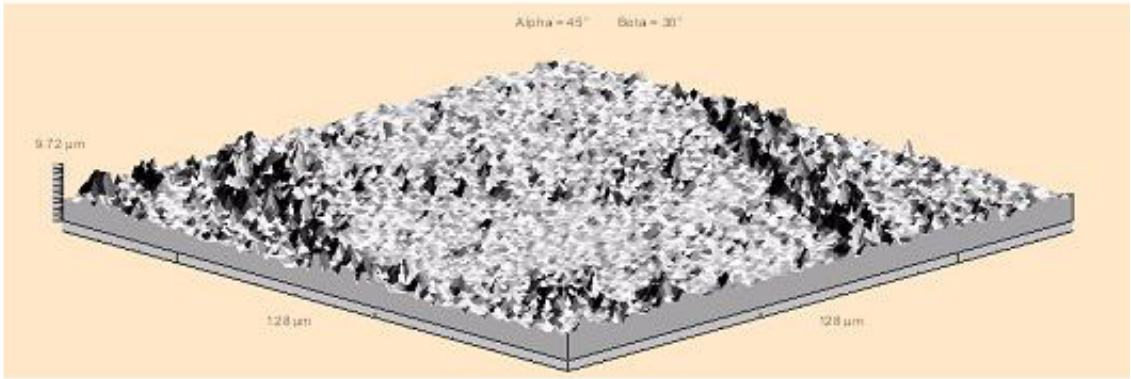

At Location C

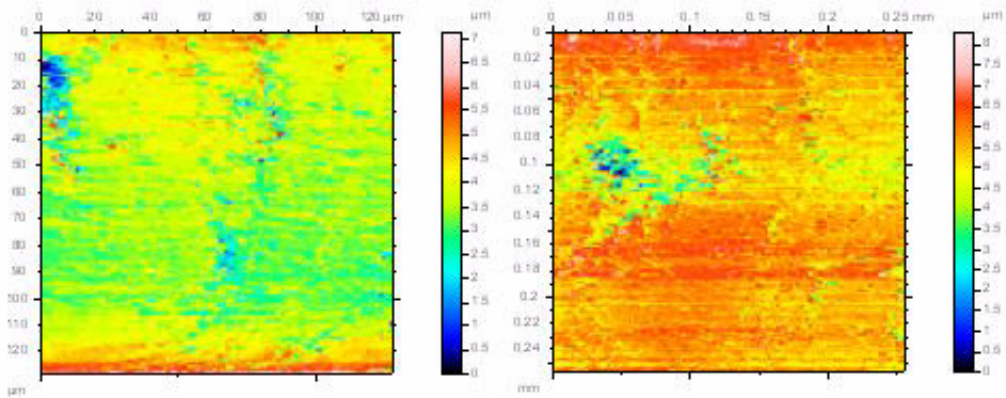

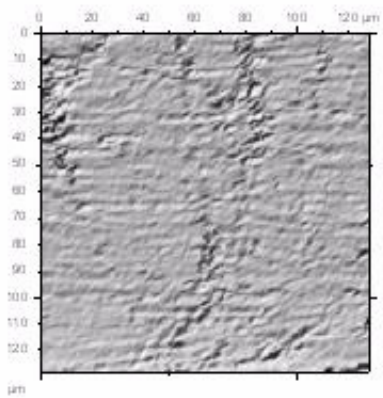

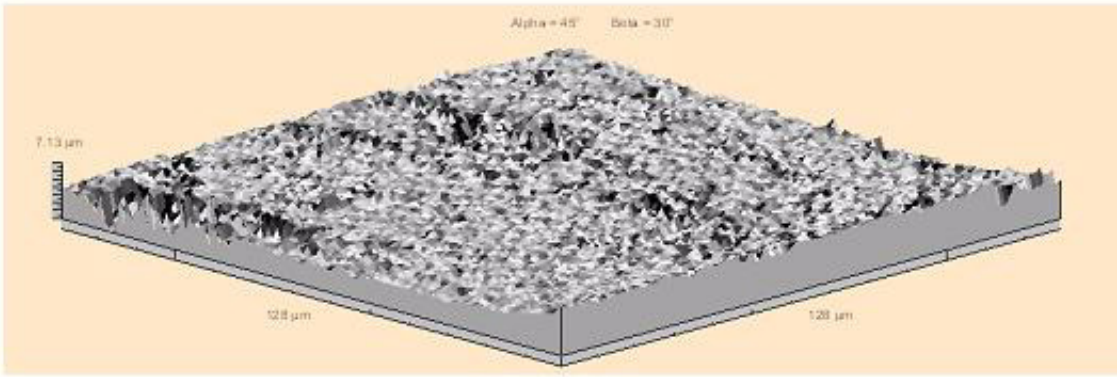

Parameters calculated on the surface
RAD A05-Topography

Amplitude Parameters

Sa	=	0.455 µm
Sq	=	0.658 µm
Sp	=	3.48 µm
Sv	=	3.65 µm
St	=	7.13 µm
Ssk	=	0.332
Sku	=	3.58
Sz	=	5.26 µm